Officially Released to the LBNL Document Control Center
Released: October 20th, 2004 DCC Auth Key: LVG8LUOEUU
Downloaded by: Karsten M Heeger at October 26, 2004 14:40:29

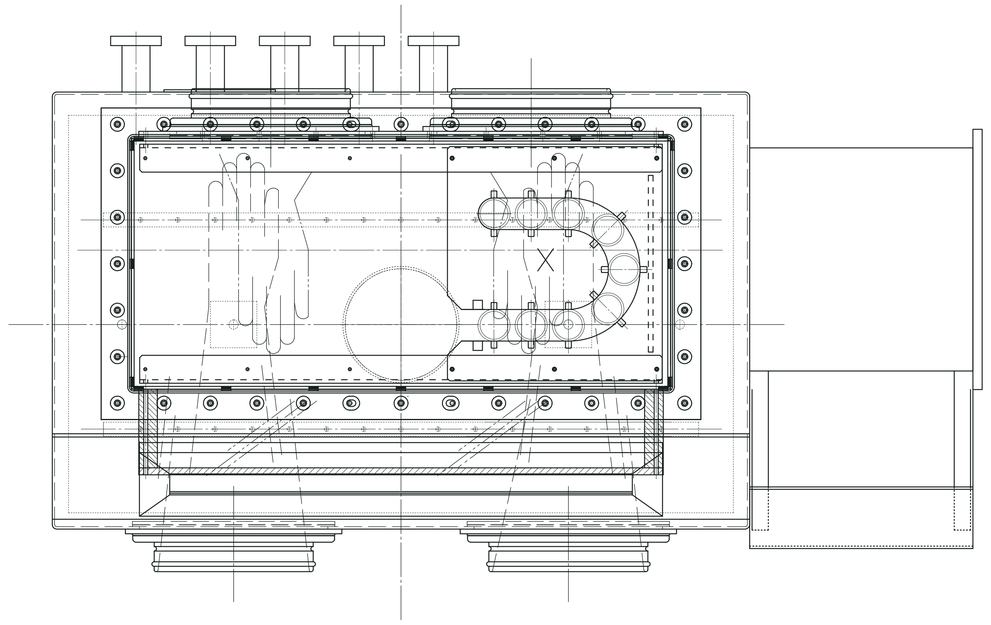

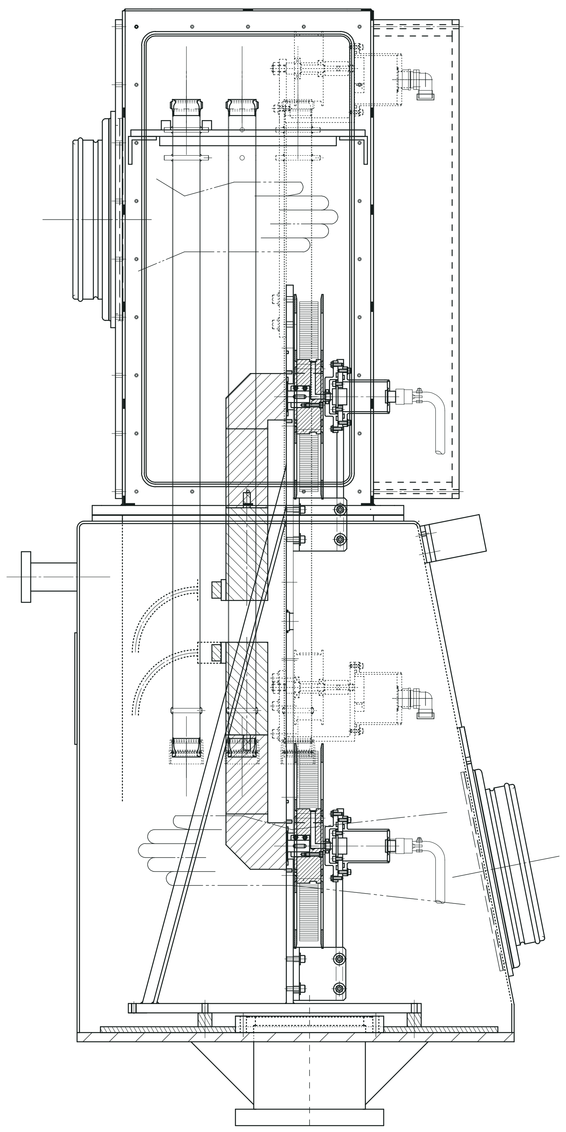

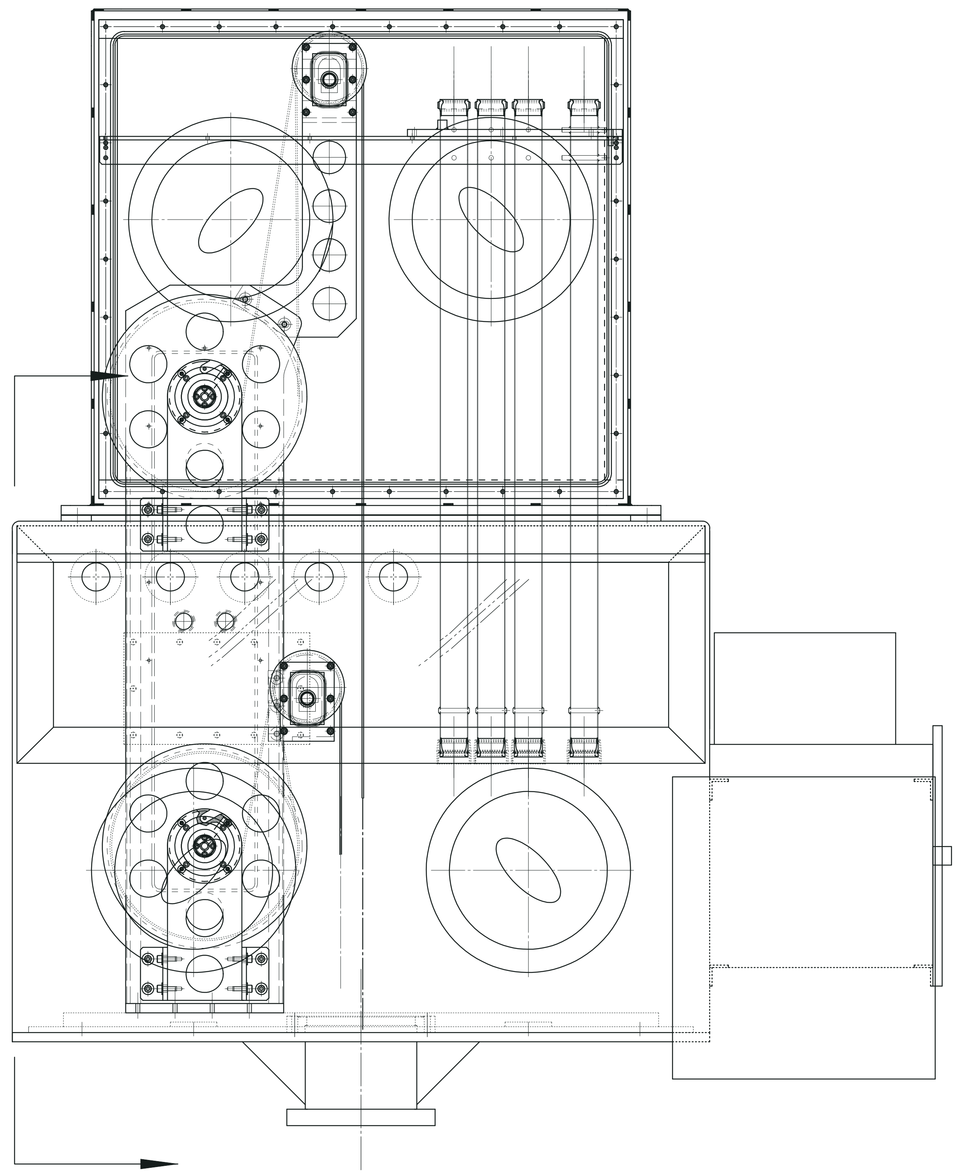

27A1416

NOTE:

ALL PARTS ARE TO BE UHV CLEAN.

REQD	ITEM	PART NO.	DESCRIPTION

REV	DWG	CHK	ZONE	DATE	CHANGES

UNLESS OTHERWISE SPECIFIED
TOLERANCES: X ± FRAC. ± ; XX ± ANGLES ± ; XXX ± FINISH √
THREADS ARE CLASS 2
CHAMFER ENDS OF ALL SCREW THREADS 30°
CUT 1.5 PITCH THRD RELIEF WITH ROUND NOSE TOOL ON MACHINE CUT THREADS
BREAK EDGES .016 MAX. ON MACHINED WORK
REMOVE BURRS WELD SPLATTER & LOOSE SCALE
REFERENCES: ANSI Y14.5 & B46.1

SHOP ORDERS
ACCT. NO. | SERIAL NO.
DATE ISSD | DATE REQD | NO REQD
DELIVER TO
SURFACE TREATMENT
IDENT. METH.
DWG BY S.R. ABBOTT DATE 7-10-04
CHK BY K. HEEGER DATE 7-10-04

LAWRENCE BERKELEY LABORATORY
UNIVERSITY OF CALIFORNIA-BERKELEY

KAMLAND
4-PI CALIBRATION SYSTEM
GLOVEBOX & DRIVE SYSTEM ASSEMBLY LAYOUT

PATENT CLEAR | DWG. TYPE: LAYOUT | SHOWN ON | SCALE 1:2 | DO NOT SCALE PRINTS
MICROFILMED | DESIGN ACCT. NO. | CATEGORY CODE: KA0001 | DWG. NO. 27A1416 | SIZE | REV.