Officially Released to the LBNL Document Control Center
Released: October 20th, 2004 DCC Auth Key: 1VIE0VRWF9
Downloaded by: Karsten M Heeger at October 26, 2004 14:40:00

NOTES:

1. DO NOT REMOVE PROTECTIVE COVERING ON THE LUCITE EXCEPT ON THE GLUED JOINTS.
2. MAKE ALL EDGES CLEAR BY APPLYING APPROPRIATE SOLVENT TO EDGES AFTER MACHINING.
3. DIMENSIONING & TOLERANCING IS PER ASME Y14.5M-1994. ALL DIMENSIONS ARE IN INCHES. REFERENCE DIMENSIONS ARE SHOWN IN PARENTHESIS.
4. GLUE ITEMS 1, 2, AND 3 TOGETHER. MAKE SURE THAT ALL GLUE JOINTS ARE WATER TIGHT.
5. ESTIMATED WEIGHT: 21 POUNDS.

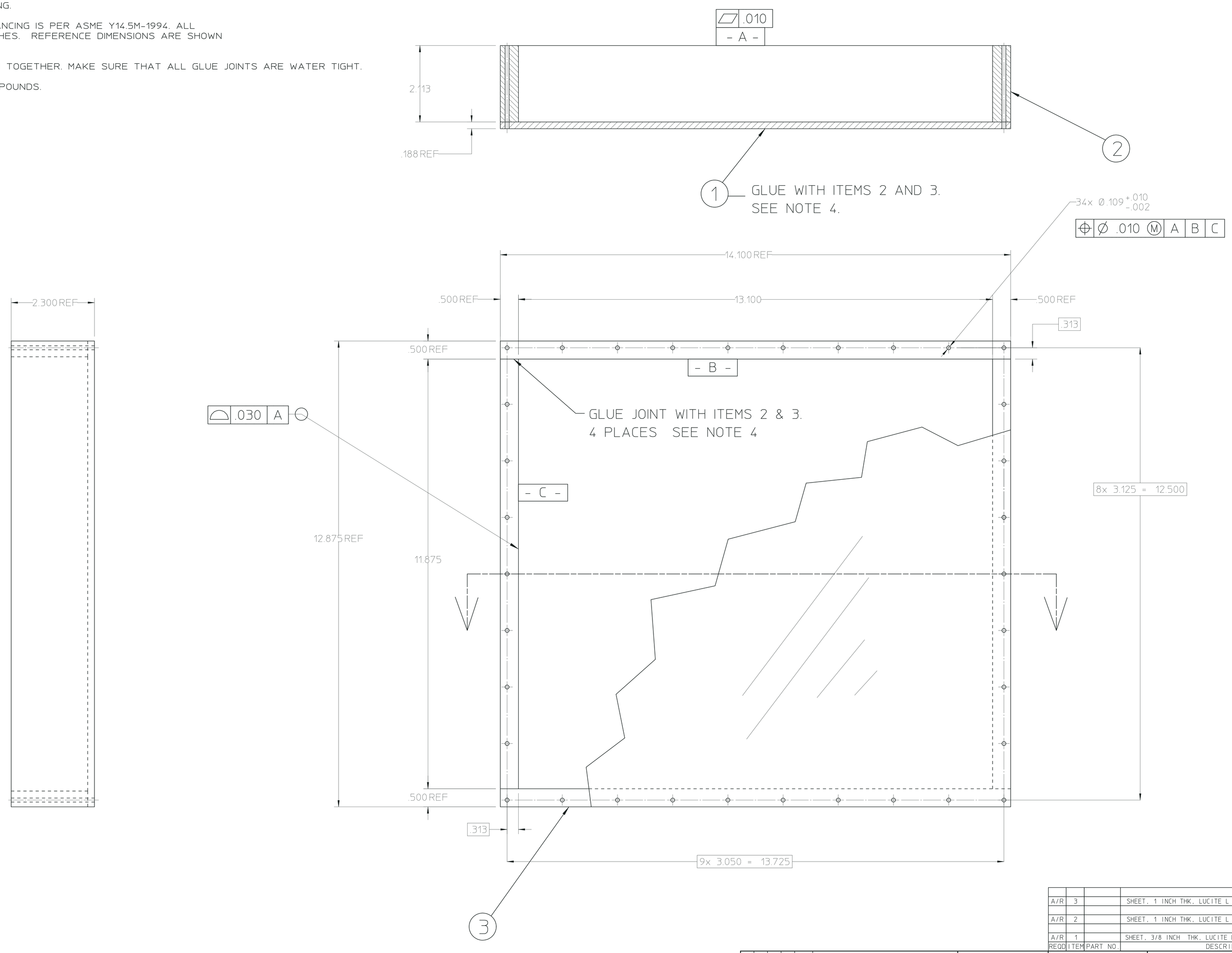

27A1396A

REQD	ITEM	PART NO.	DESCRIPTION
A/R	3		SHEET, 1 INCH THK, LUCITE L ACRYLIC, MAT'L CERTS REQ'D
A/R	2		SHEET, 1 INCH THK, LUCITE L ACRYLIC, MAT'L CERTS REQ'D
A/R	1		SHEET, 3/8 INCH THK, LUCITE L ACRYLIC, MAT'L CERTS REQ'D

REV	DWG	CHK	ZONE	DATE	CHANGES
A	YM	SA		2/04	GENERAL REVISION

UNLESS OTHERWISE SPECIFIED
TOLERANCES: .X ± --- FRAC. ±1/64; .XX ± .03 ANGLES ± 2°; .XXX ± .015 FINISH 63
THREADS ARE CLASS 2.
CHAMFER ENDS OF ALL SCREW THREADS 30° (UT 1.5 PITCH THRD RELIEF WITH ROUND NOSE TOOL ON MACHINE CUT THREADS.
BREAK EDGES .016 MAX. ON MACHINED WORK.
REMOVE BURRS WELD SPLATTER & LOOSE SCALE
REFERENCES: ANSI Y14.5 & B46.1.

SHOP ORDERS
ACCT. NO. | SERIAL NO.
DATE ISSD | DATE REQD | NO. REQD
DELIVER TO
SURFACE TREATMENT: SEE NOTES 1&2
IDENT. METH: TAG
DWG. BY: Y. MINAMIHARA DATE: 2-18-04
CHK. BY | DATE

LAWRENCE BERKELEY LABORATORY
UNIVERSITY OF CALIFORNIA-BERKELEY
KAMLAND
4-PI CALIBRATION SYSTEM
GLOVEBOX EXTENSION FRONT COVER

PATENT CLEAR | DWG. TYPE: DETAIL | SHOWN ON | SCALE: FULL | DO NOT SCALE PRINTS
MICROFILMED | DESIGN ACCT. NO | CATEGORY CODE: KA0001 | DWG. NO.: 27A1396 | SIZE | REV: A