Officially Released to the LBNL Document Control Center
Released: October 20th, 2004 DCC Auth Key: B0DHRIF03S

Downloaded by: Karsten M Heeger at October 26, 2004 14:42:35

| REQ | ITEM | PART NUMBER | DESCRIPTION |
|---|---|---|---|
| | | | 304 STAINLESS STEEL |
| | | | |
| | | | |

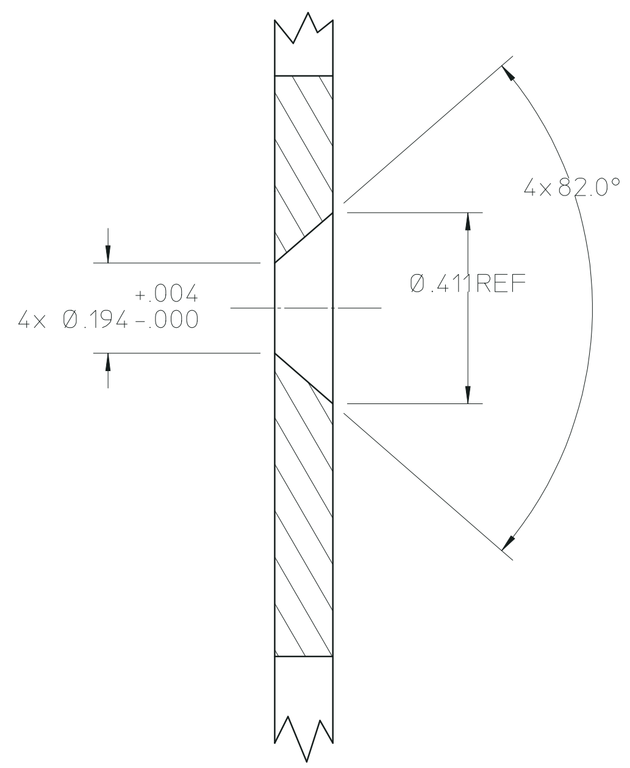


DETAIL A
SCALE: 4X

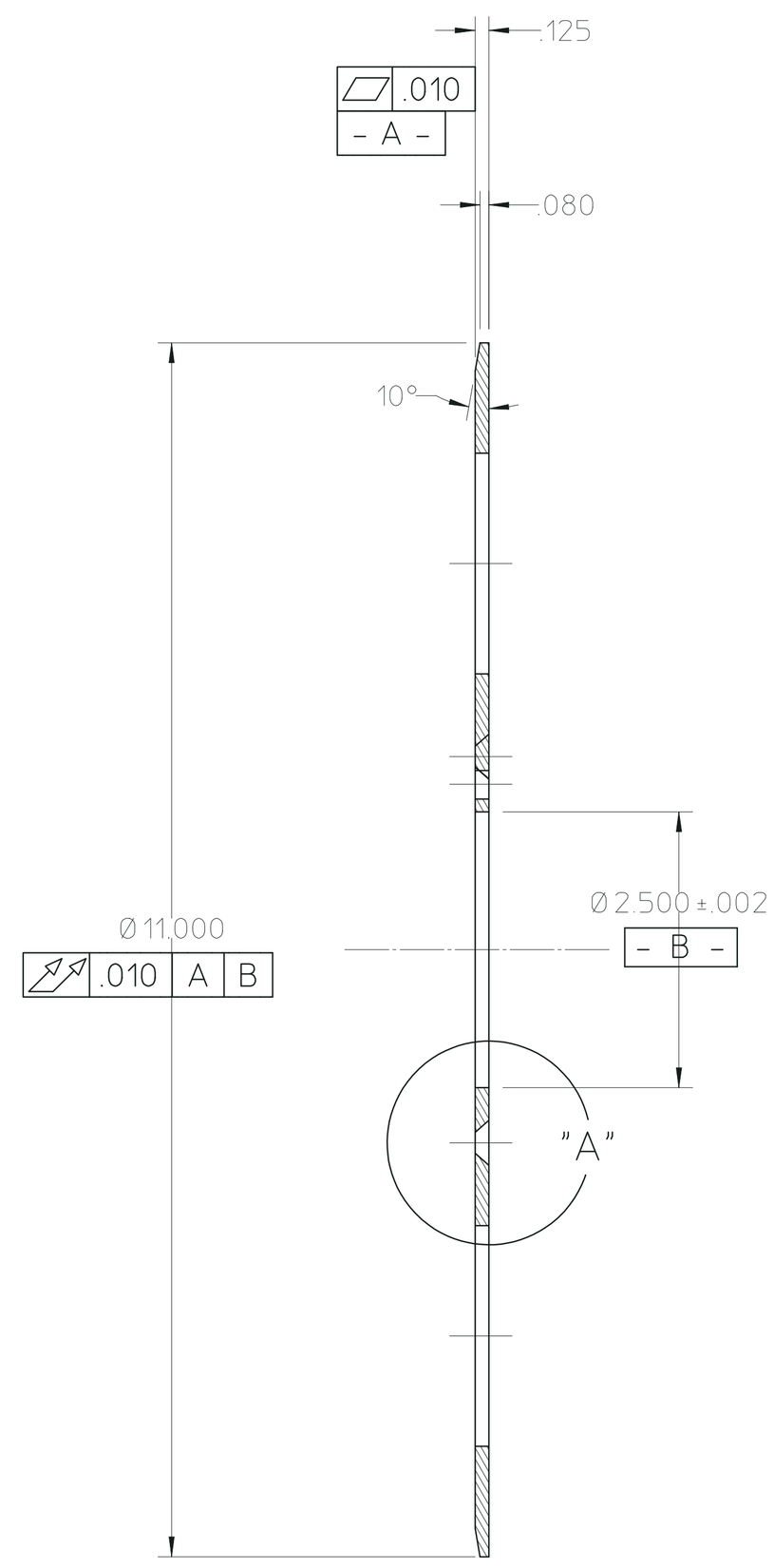


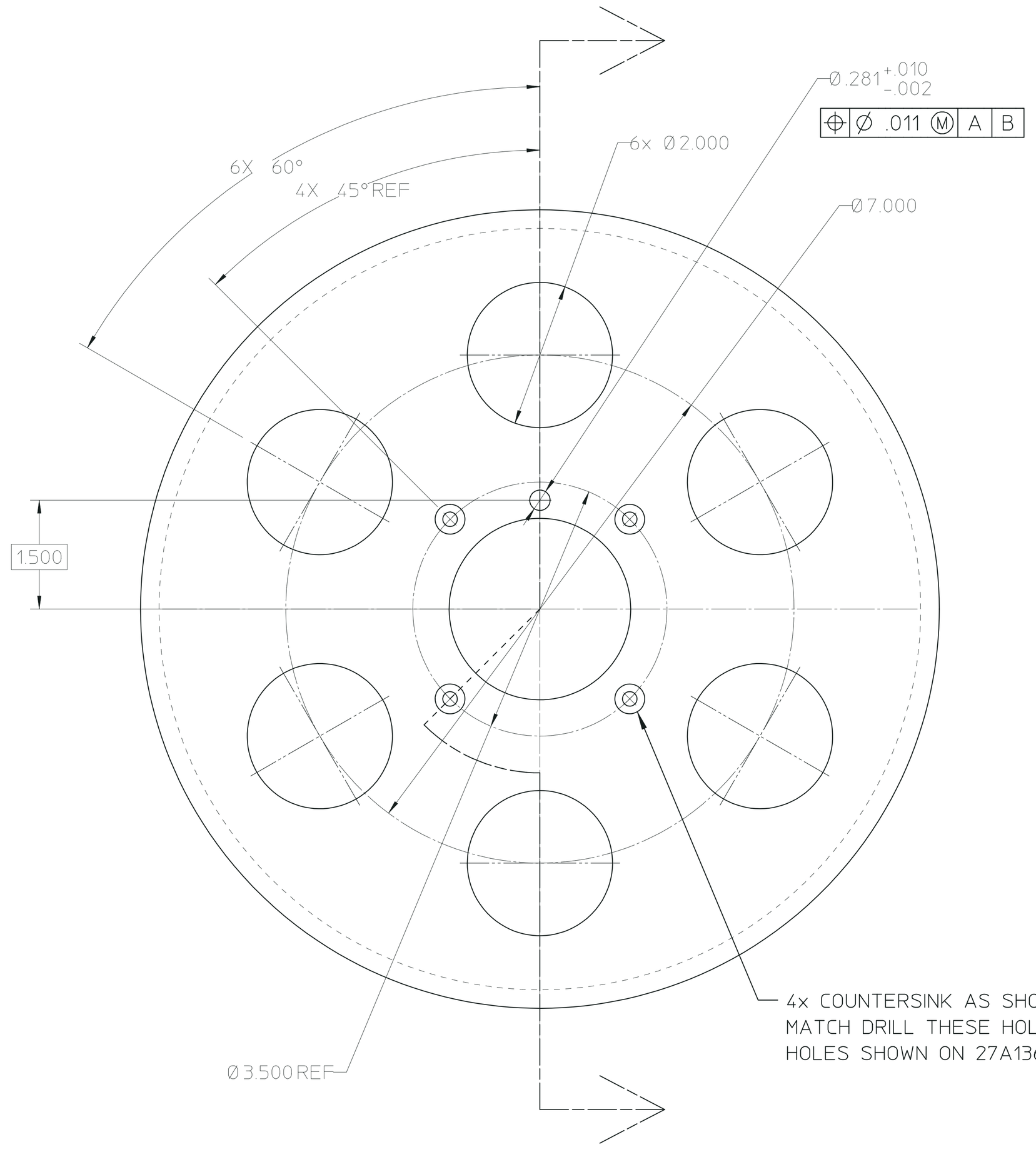


27A1384

NOTES:
1. ALL DIMENSIONS ARE IN INCHES.
2. UNLESS OTHERWISE SPECIFIED, CHAMFER ALL CORNERS .020 X 45 DEG.

| REV | DWG | CHK | ZONE | DATE | CHANGES |
|---|---|---|---|---|---|

UNLESS OTHERWISE SPECIFIED
TOLERANCES: .X ± .1 FRAC. ±1/64; .XX ± .030 ANGLES ± .2°; .XXX ± .015 FINISH 63 √
THREADS ARE CLASS 2
CHAMFER ENDS OF ALL SCREW THREADS 30°
CUT 1.5 PITCH THRD RELIEF WITH ROUND NOSE TOOL ON MACHINE CUT THREADS.
BREAK EDGES .016 MAX. ON MACHINED WORK
REMOVE BURRS WELD SPLATTER & LOOSE SCALE
REFERENCES: ANSI Y14.5 & B46.1.

SHOP ORDERS
ACCT. NO. | SERIAL NO.
DATE ISSD. | DATE REQD. | NO. REQD.
DELIVER TO
SURFACE TREATMENT DEGREASE
IDENT. METH. TAG
DWG. BY Y. MINAMIHARA DATE 02-09-04
CHK. BY DATE

**LAWRENCE BERKELEY LABORATORY**
UNIVERSITY OF CALIFORNIA-BERKELEY
KAMLAND
4 PI CALBRATION SYSTEM
SPOOL SIDE PLATE - RIGHT HAND

| PATENT CLEAR | DWG. TYPE | SHOWN ON | SCALE | DO NOT SCALE PRINTS |
|---|---|---|---|---|
| | DETAIL | | FULL | |
| MICROFILMED | DESIGN ACCT. NO. | CATEGORY CODE | DWG. NO. | SIZE / REV. |
| | | KA0001 | 27A1384 | |