Officially Released to the LBNL Document Control Center
Released: October 20th, 2004 DCC Auth Key: 7R1Q3E809Y
Downloaded by: Karsten M Heeger at October 26, 2004 14:42:24

REQ	ITEM	PART NUMBER	DESCRIPTION
			304 STAINLESS STEEL

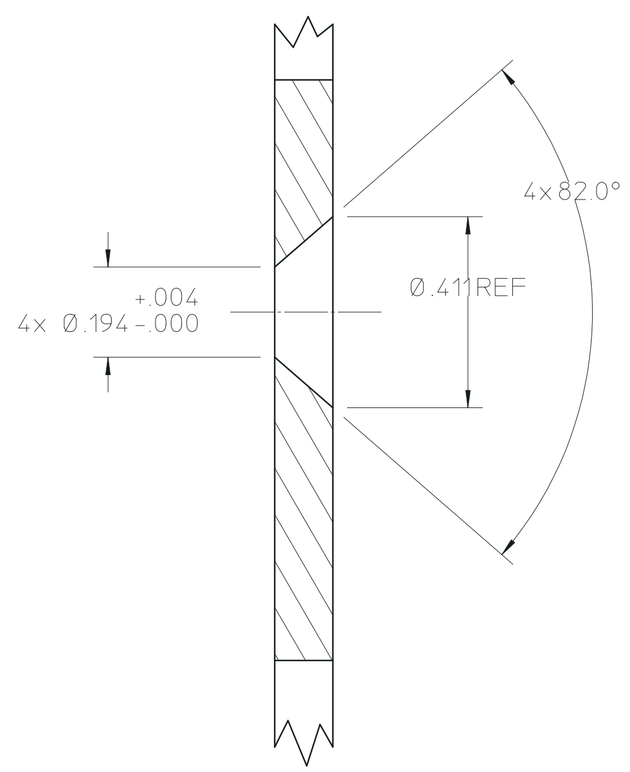

DETAIL A
SCALE: 4X

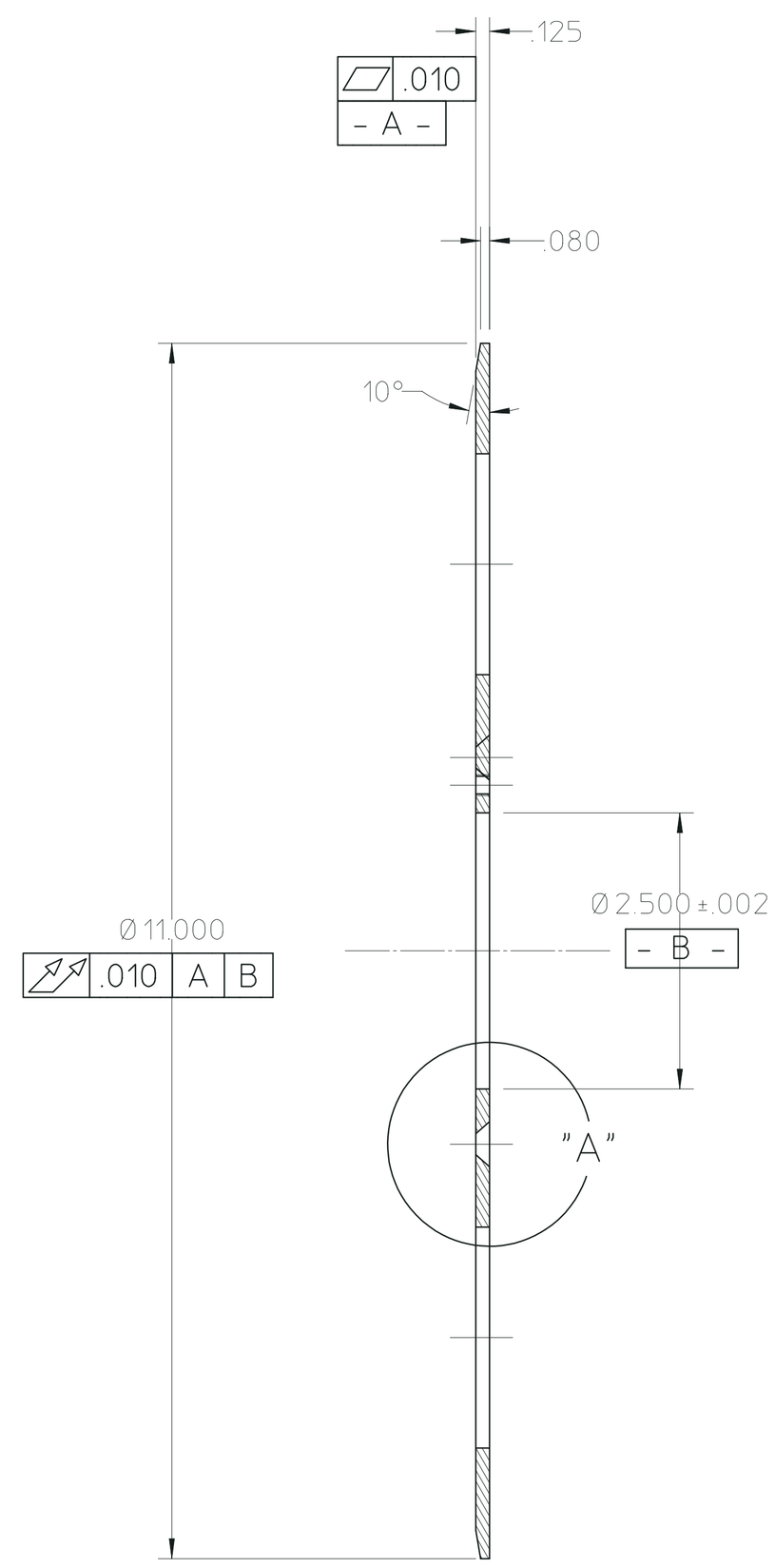

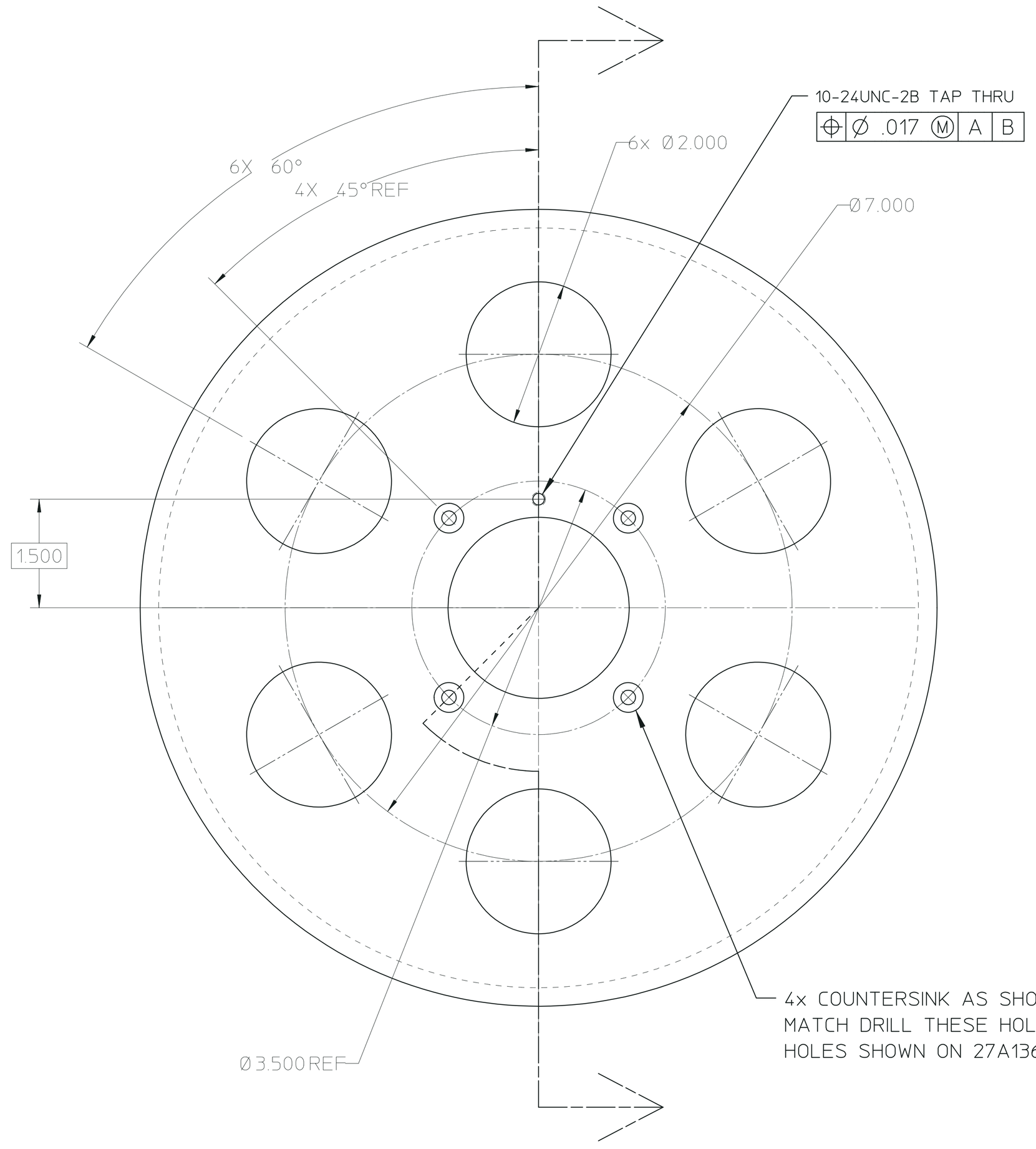

27A1374

NOTES:
1. ALL DIMENSIONS ARE IN INCHES.
2. UNLESS OTHERWISE SPECIFIED, CHAMFER ALL CORNERS .020 X 45 DEG.

REV	DWG	CHK	ZONE	DATE	CHANGES

UNLESS OTHERWISE SPECIFIED
TOLERANCES: .X ± .1 — FRAC. ±1/64; .XX ± .030 — ANGLES ± .2°; .XXX ± .015 — FINISH 63 √
THREADS ARE CLASS 2
CHAMFER ENDS OF ALL SCREW THREADS 30°
CUT 1.5 PITCH THRD RELIEF WITH ROUND NOSE TOOL ON MACHINE CUT THREADS.
BREAK EDGES .016 MAX. ON MACHINED WORK
REMOVE BURRS WELD SPLATTER & LOOSE SCALE
REFERENCES: ANSI Y14.5 & B46.1.

SHOP ORDERS
ACCT. NO. | SERIAL NO.
DATE ISSD. | DATE REQD. | NO. REQD.
DELIVER TO
SURFACE TREATMENT: DEGREASE
IDENT. METH.: TAG
DWG. BY: Y. MINAMIHARA | DATE: 02-09-04
CHK. BY | DATE

LAWRENCE BERKELEY LABORATORY
UNIVERSITY OF CALIFORNIA-BERKELEY
KAMLAND
4 PI CALBRATION SYSTEM
SPOOL SIDE PLATE - LEFT HAND

PATENT CLEAR	DWG. TYPE	SHOWN ON	SCALE	DO NOT SCALE PRINTS
	DETAIL		FULL	
MICROFILMED	DESIGN ACCT. NO.	CATEGORY CODE	DWG. NO.	SIZE / REV.
		KA0001	27A1374	