Officially Released to the LBNL Document Control Center
Released: October 20th, 2004 DCC Auth Key: R9GGNU38Z9

Downloaded by: Karsten M Heeger at October 26, 2004 14:39:49

REQ	ITEM	PART NUMBER	DESCRIPTION
			PLATE, 304 S.S.

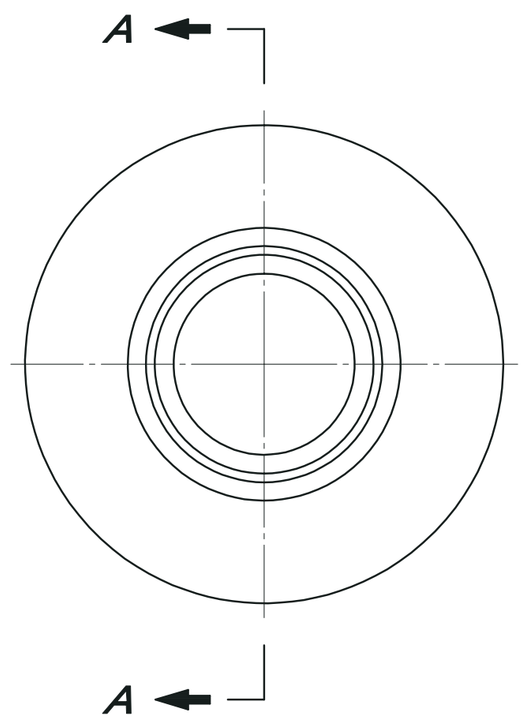

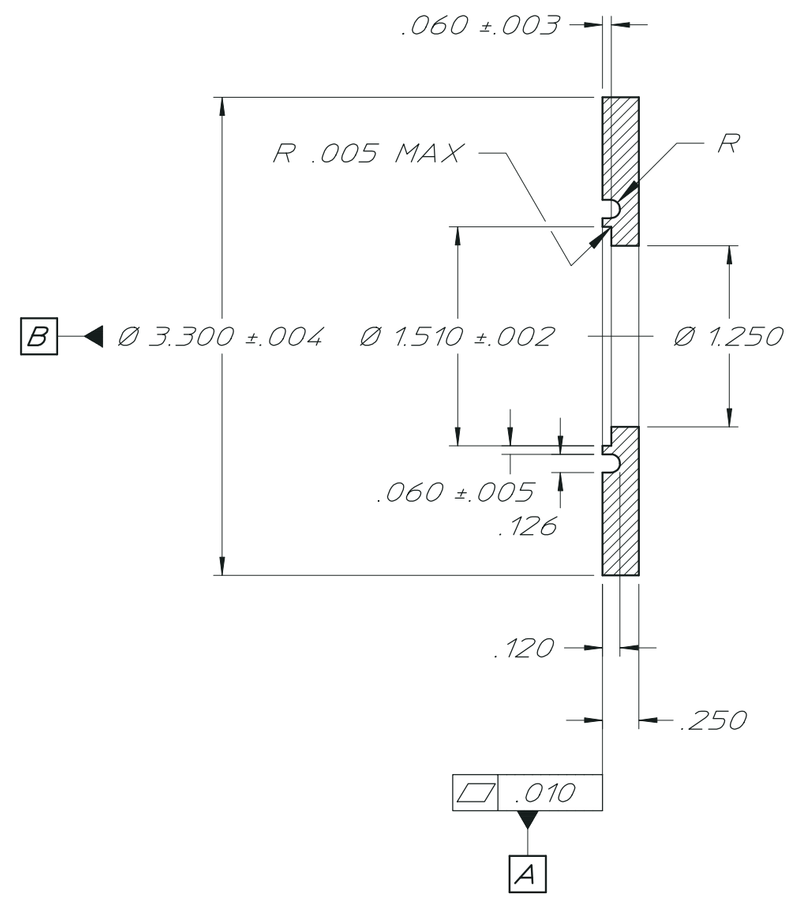

27A1353

SECTION A–A

NOTES:

1. UNLESS OTHERWISE SPECIFIED, TOTAL RUNOUT ON ALL SURFACES IS .005 WITH RESPECT TO DATUMS A & B.
2. UNLESS OTHERWISE SPECIFIED, ALL EXTERIOR CORNERS ARE TO REMAIN SHARP.
3. DIMENSIONING & TOLERANCING IS PER ASME Y14.5M-1994. ALL DIMENSIONS ARE IN INCHES. REFERENCE DIMENSIONS ARE SHOWN IN PARENTHESIS.

REV	DWG	CHK	ZONE	DATE	CHANGES

UNLESS OTHERWISE SPECIFIED

TOLERANCES			
	.X ± ---	FRAC. ±1/64	
	.XX ± .03	ANGLES ±.1°	
	.XXX ± .010	FINISH 63√	

THREADS ARE CLASS 2
CHAMFER ENDS OF ALL SCREW THREADS 30°.
CUT 1.5 PITCH THRD RELIEF WITH ROUND NOSE TOOL ON MACHINE CUT THREADS.
BREAK EDGES .016 MAX. ON MACHINED WORK
REMOVE BURRS WELD SPLATTER & LOOSE SCALE
REFERENCES: ANSI Y14.5 & B46.1.

SHOP ORDERS		
ACCT. NO.	SERIAL NO.	
DATE ISSD	DATE REQD.	NO. REQD.
DELIVER TO		
SURFACE TREATMENT		
IDENT. METH.		
DWG. BY S.R. ABBOTT		DATE 1-20-04
CHK. BY K. HEEGER		DATE 1-20-04

LAWRENCE BERKELEY LABORATORY
UNIVERSITY OF CALIFORNIA-BERKELEY

KAMLAND

4-PI CALIBRATION SYSTEM

SLIP RING CONNECTION ENCLOSURE END PLATE

PATENT CLEAR	DWG. TYPE	SHOWN ON	SCALE 2:1	DO NOT SCALE PRINTS
	DETAIL			
MICROFILMED	DESIGN ACCT. NO.	CATEGORY CODE KA0001	DWG. NO. 27A1353	SIZE / REV.