Officially Released to the LBNL Document Control Center
Released: October 20th, 2004 DCC Auth Key: SG6ZNJ9HZZ

Downloaded by: Karsten M Heeger at October 26, 2004 14:39:28

REQ	ITEM	PART NUMBER	DESCRIPTION
			PLATE, 304 S.S.

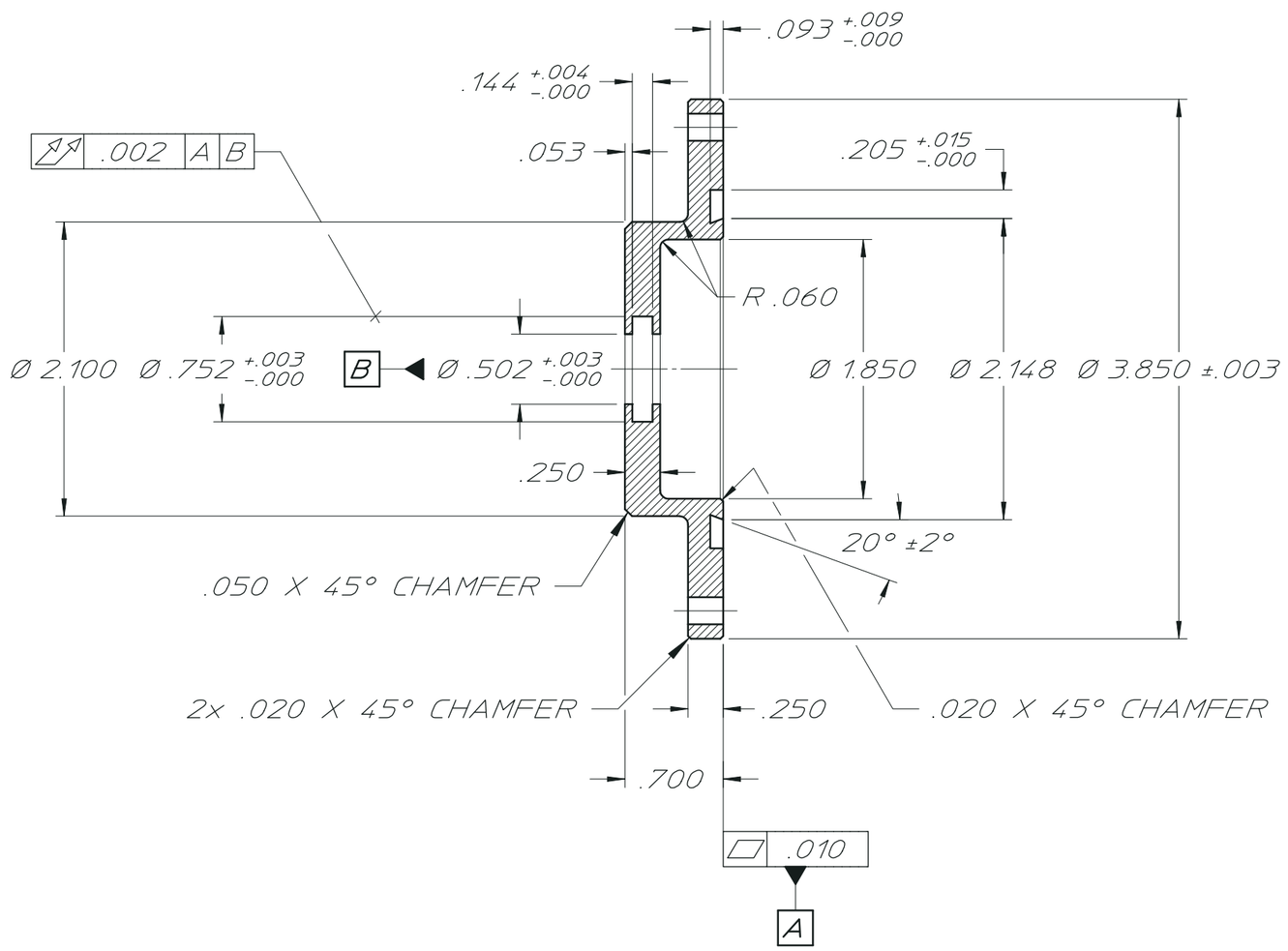

SECTION A–A

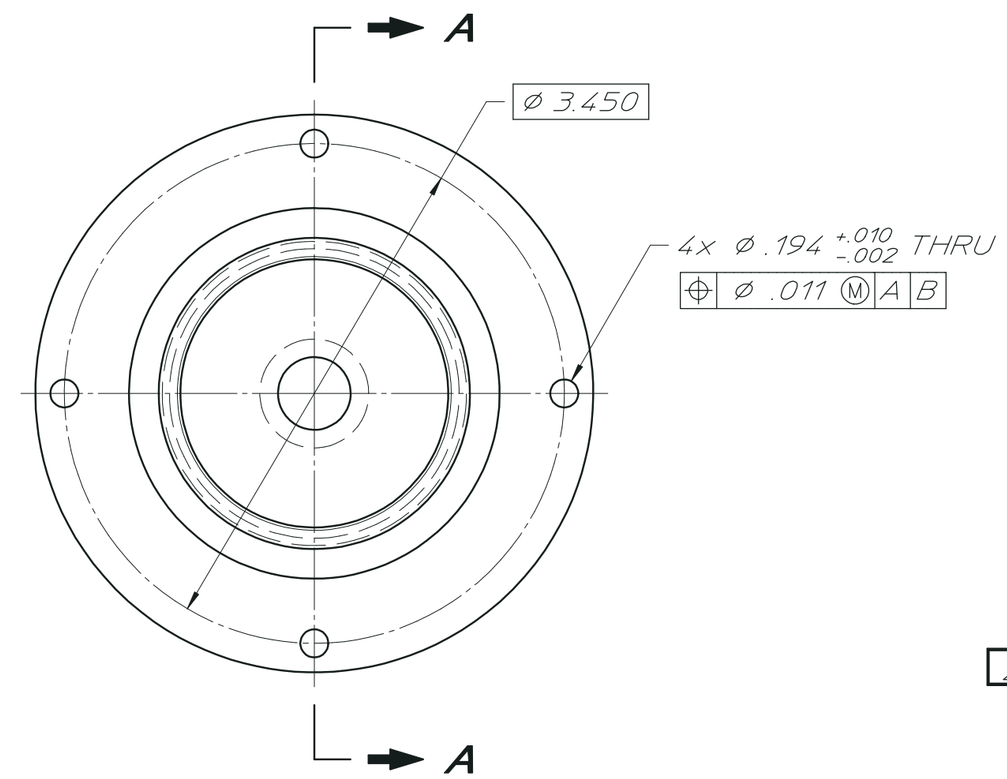

27A1333

NOTES:

1. UNLESS OTHERWISE SPECIFIED, TOTAL RUNOUT ON ALL SURFACES IS .010 WITH RESPECT TO DATUMS A & B.
2. UNLESS OTHERWISE SPECIFIED, ALL INSIDE CORNER RADII ARE .010 MAX.
3. DIMENSIONING & TOLERANCING IS PER ASME Y14.5M-1994. ALL DIMENSIONS ARE IN INCHES. REFERENCE DIMENSIONS ARE SHOWN IN PARENTHESIS.

REV	DWG	CHK	ZONE	DATE	CHANGES

UNLESS OTHERWISE SPECIFIED

TOLERANCES			
.X ± ---	FRAC. ±1/64		
.XX ± .03	ANGLES ±.1°		
.XXX ± .010	FINISH 63√		

THREADS ARE CLASS 2
CHAMFER ENDS OF ALL SCREW THREADS 30°.
CUT 1.5 PITCH THRD RELIEF WITH ROUND NOSE TOOL ON MACHINE CUT THREADS.
BREAK EDGES .016 MAX. ON MACHINED WORK
REMOVE BURRS WELD SPLATTER & LOOSE SCALE
REFERENCES: ANSI Y14.5 & B46.1.

SHOP ORDERS

ACCT. NO.		SERIAL NO.	
DATE ISSD	DATE REQD.	NO. REQD.	
DELIVER TO			
SURFACE TREATMENT			
IDENT. METH.			
DWG. BY S.R. ABBOTT		DATE 1-20-04	
CHK. BY K. HEEGER		DATE 1-20-04	

LAWRENCE BERKELEY LABORATORY
UNIVERSITY OF CALIFORNIA-BERKELEY

KAMLAND
4-PI CALIBRATION SYSTEM
SLIP RING SEAL FLANGE

PATENT CLEAR	DWG. TYPE DETAIL	SHOWN ON	SCALE 1 : 1	DO NOT SCALE PRINTS
MICROFILMED	DESIGN ACCT. NO.	CATEGORY CODE KA0001	DWG. NO. 27A1333	SIZE / REV.