Officially Released to the LBNL Document Control Center
Released: October 20th, 2004 DCC Auth Key: LMSYIIWU7

Downloaded by: Karsten M Heeger at October 26, 2004 14:31:46

REQ	ITEM	PART NUMBER	DESCRIPTION
			PLATE, 304 S.S.

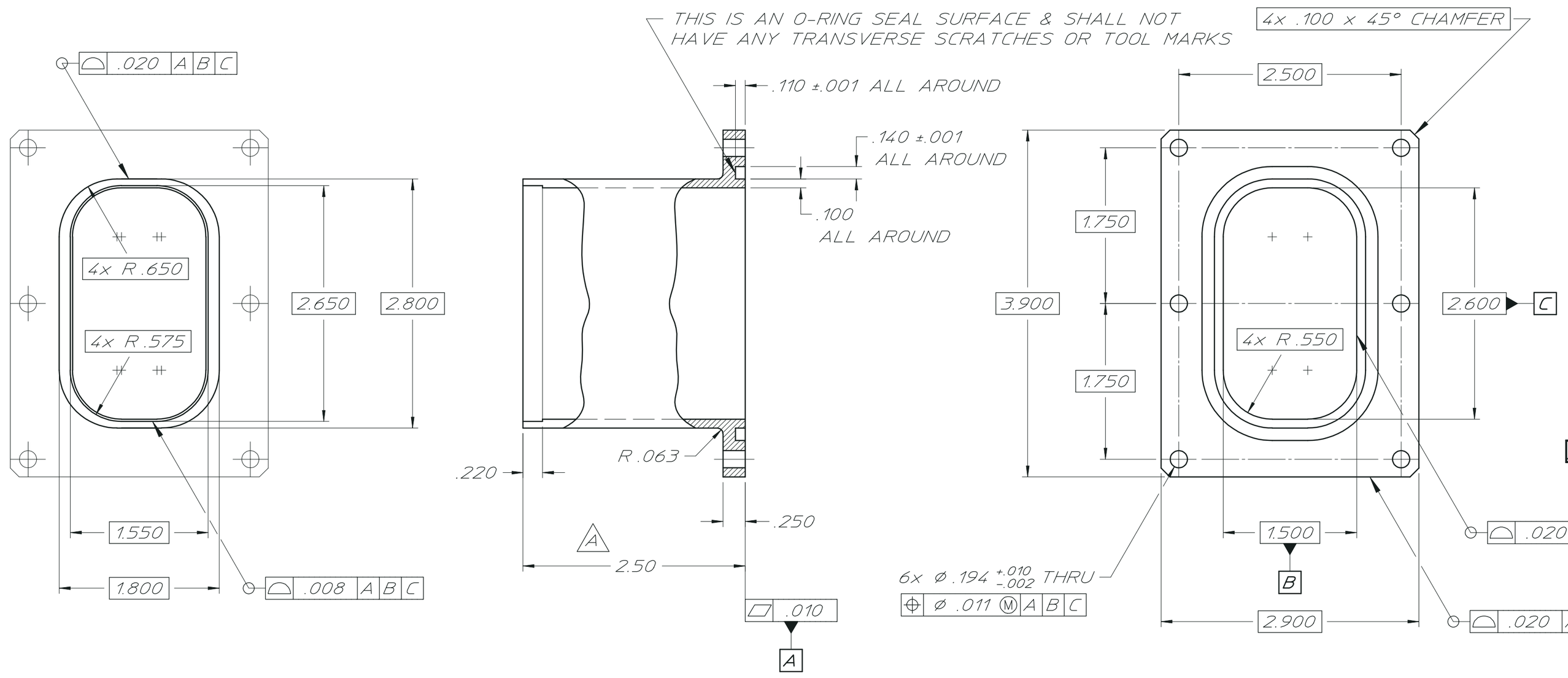

NOTES:

1. UNLESS OTHERWISE SPECIFIED, ALL INSIDE CORNER RADII ARE .010 MAX.
2. DIMENSIONING & TOLERANCING IS PER ASME Y14.5M-1994. ALL DIMENSIONS ARE IN INCHES. REFERENCE DIMENSIONS ARE SHOWN IN PARENTHESIS.

REV	DWG	CHK	ZONE	DATE	CHANGES
A	SRA	KH		2-17-04	CHG'D 4.00 TO 2.50

UNLESS OTHERWISE SPECIFIED

TOLERANCES			
.X ± ---	FRAC. ±1/64		
.XX ± .03	ANGLES ±. 1°		
.XXX ± .010	FINISH 63√		

THREADS ARE CLASS 2
CHAMFER ENDS OF ALL SCREW THREADS 30°.
CUT 1.5 PITCH THRD RELIEF WITH ROUND NOSE TOOL ON MACHINE CUT THREADS.
BREAK EDGES .016 MAX. ON MACHINED WORK
REMOVE BURRS WELD SPLATTER & LOOSE SCALE
REFERENCES: ANSI Y14.5 & B46.1.

SHOP ORDERS

ACCT. NO.	SERIAL NO.	
DATE ISSD	DATE REQD.	NO. REQD.
DELIVER TO		
SURFACE TREATMENT		
IDENT. METH.		
DWG. BY S.R. ABBOTT		DATE 1-20-04
CHK. BY K. HEEGER		DATE 1-20-04

LAWRENCE BERKELEY LABORATORY
UNIVERSITY OF CALIFORNIA-BERKELEY

KAMLAND
4-PI CALIBRATION SYSTEM
ENCODER CONNECTION ENCLOSURE

PATENT CLEAR	DWG. TYPE	SHOWN ON	SCALE 1 : 1	DO NOT SCALE PRINTS
	DETAIL			
MICROFILMED	DESIGN ACCT. NO.	CATEGORY CODE KA0001	DWG. NO. 27A1283	SIZE / REV. A