Officially Released to the LBNL Document Control Center
Released: October 19th, 2004 DCC Auth Key: I0CD0Z0EHE

Downloaded by: Karsten M Heeger at October 26, 2004 14:45:18

REQ	ITEM	PART NUMBER	DESCRIPTION
			PLATE, 304 S.S.

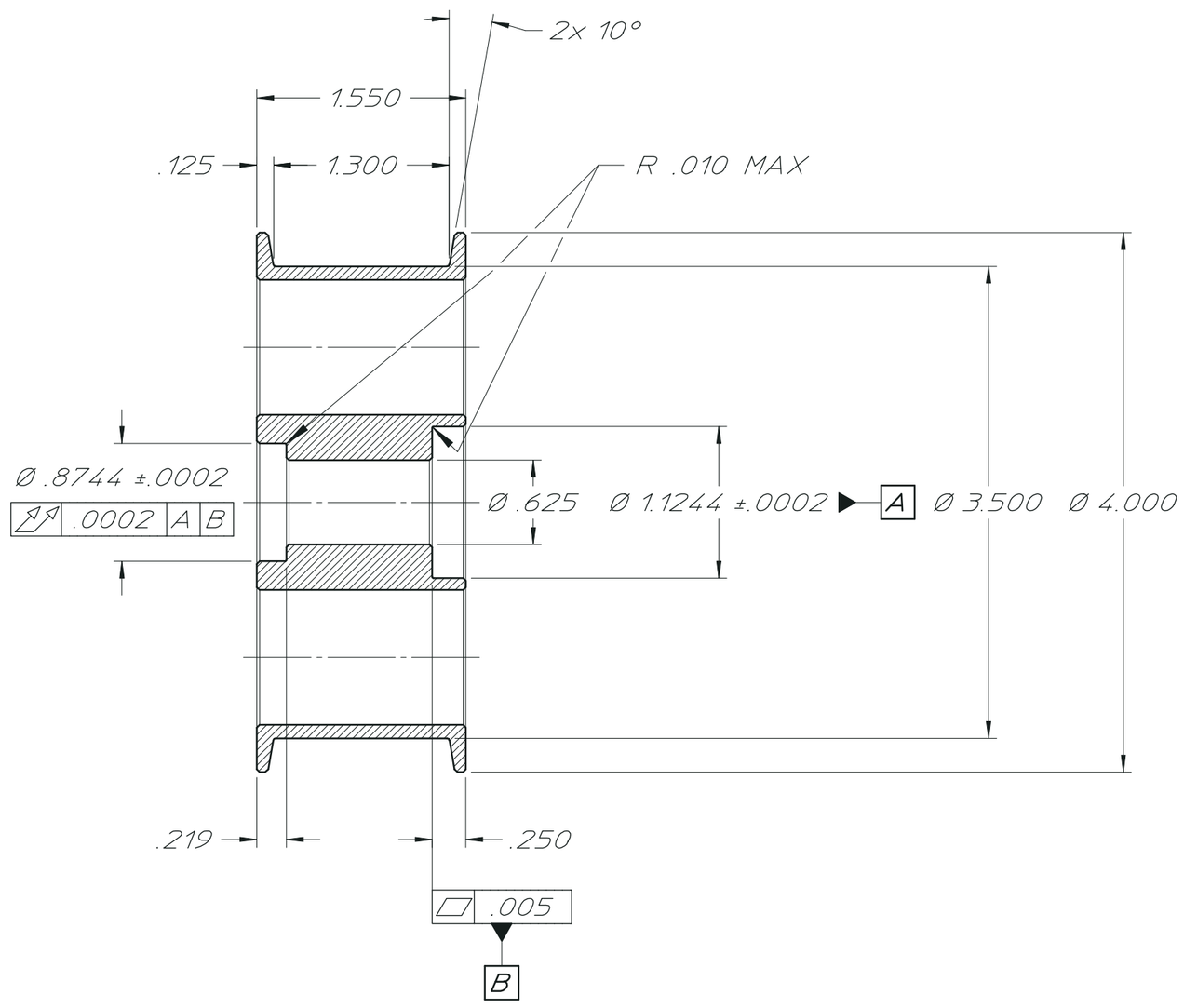

SECTION A–A

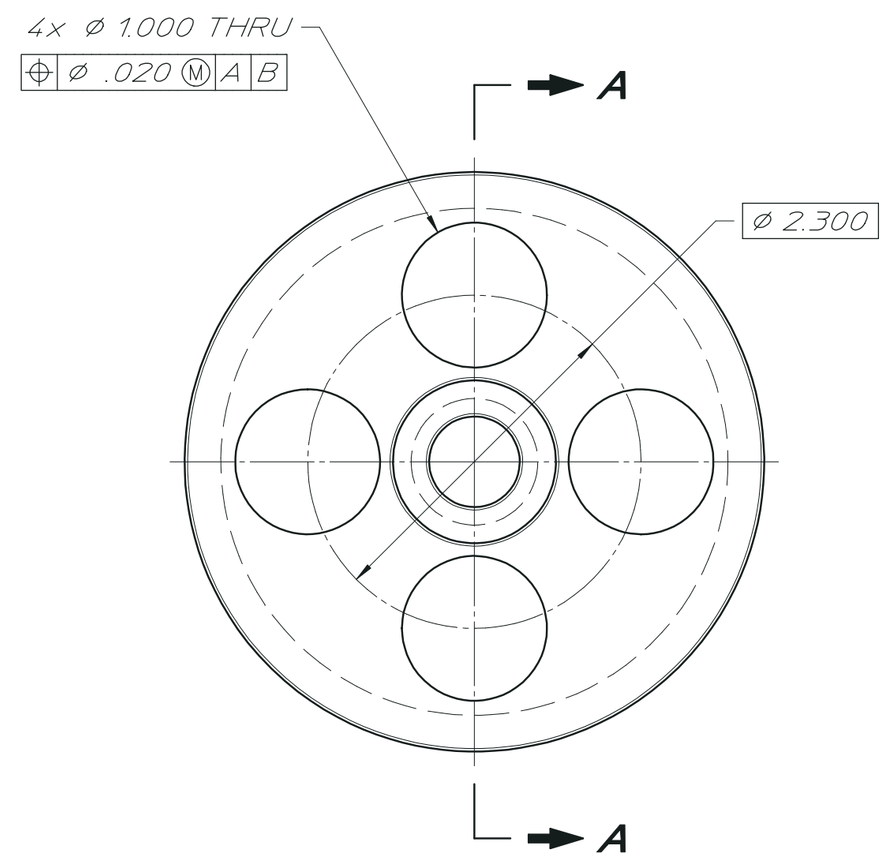

27A1243

NOTES:

1. UNLESS OTHERWISE SPECIFIED, TOTAL RUNOUT ON ALL SURFACES IS .005 MAX WITH RESPECT TO DATUMS A & B.
2. UNLESS OTHERWISE SPECIFIED, ALL INSIDE CORNER RADII ARE .020 MAX & CHAMFER ALL CORNERS .020 X 45°.
3. DIMENSIONING & TOLERANCING IS PER ASME Y14.5M-1994. ALL DIMENSIONS ARE IN INCHES. REFERENCE DIMENSIONS ARE SHOWN IN PARENTHESIS.

REV	DWG	CHK	ZONE	DATE	CHANGES

UNLESS OTHERWISE SPECIFIED

TOLERANCES			
	.X ± ---	FRAC.	±1/64
	.XX ± .03	ANGLES	±.1°
	.XXX ± .010	FINISH	63√

THREADS ARE CLASS 2
CHAMFER ENDS OF ALL SCREW THREADS 30°.
CUT 1.5 PITCH THRD RELIEF WITH ROUND NOSE TOOL ON MACHINE CUT THREADS.
BREAK EDGES .016 MAX. ON MACHINED WORK
REMOVE BURRS WELD SPLATTER & LOOSE SCALE
REFERENCES: ANSI Y14.5 & B46.1.

SHOP ORDERS

ACCT. NO.		SERIAL NO.	
DATE ISSD	DATE REQD.	NO. REQD.	
DELIVER TO			
SURFACE TREATMENT			
IDENT. METH.			
DWG. BY	S.R. ABBOTT	DATE	1-20-04
CHK. BY	K. HEEGER	DATE	1-20-04

LAWRENCE BERKELEY LABORATORY
UNIVERSITY OF CALIFORNIA-BERKELEY

KAMLAND

4-PI CALIBRATION SYSTEM

PULLEY

PATENT CLEAR	DWG. TYPE	SHOWN ON	SCALE 1 : 1	DO NOT SCALE PRINTS
	DETAIL			
MICROFILMED	DESIGN ACCT. NO.	CATEGORY CODE KA0001	DWG. NO. 27A1243	SIZE / REV.