Officially Released to the LBNL Document Control Center
Released: October 20th, 2004 DCC Auth Key: CMEELHYJVW

Downloaded by: Karsten M Heeger at October 26, 2004 14:43:15

27A1142	REQD	ITEM	PART NUMBER	DESCRIPTION
				304 STAINLESS STEEL

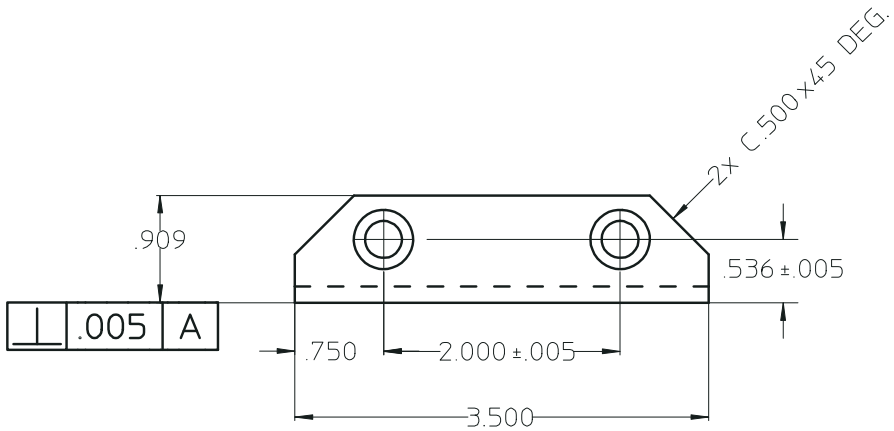

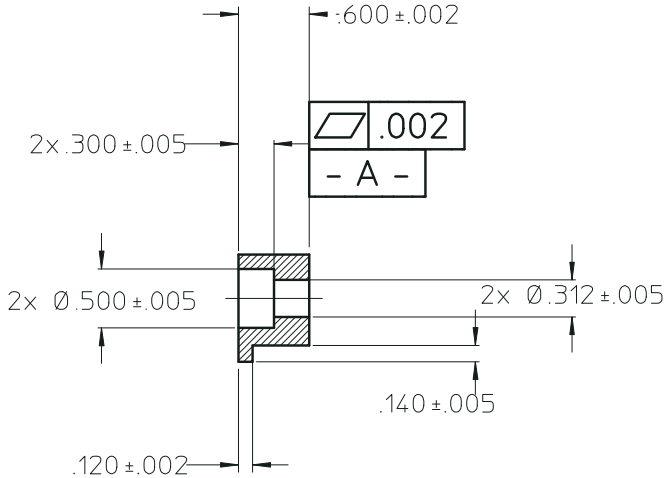

NOTE: ALL DIMENSIONS ARE IN INCHES.

REV	DWN	CHK	DATE	DESCRIPTION

UNLESS OTHERWISE SPECIFIED
TOLERANCE .X ±.1 .XX ± .03 .XXX ±.015
SURFACE FINISH 63 √

1. SAWED, FLAMECUT, SHEARED OR CUT STOCK FINISH.
2. THREADS CLASS 2.
3. CHAMFER ENDS OF ALL SCREW THRDS 30°.
4. 1 1/2 PITCH RELIEF WITH ROUND NOSE TOOL ON ALL MACHINE CUT THRDS
5. BREAK EDGES 1/64 MAX. ON MACHINE WORK.
6. REMOVE BURRS, LOOSE SCALE AND WELD SPLATTER.
7. REF.-USASI OR ASA STDS SECT Y-14 & B46-1.

SHOP ORDERS
ACCT NO | SER NO
DATE ISSD | DATE REQD | NO REQD
DELIVER TO
SURFACE TREATMENT DEGREASE
IDENTIFIC METHOD TAG
DWG BY Y. MINAMIHARA | DATE 10-21-03
CHK BY | DATE

LAWRENCE BERKELEY LABORATORY
UNIVERSITY OF CALIFORNIA-BERKELEY
KAMLAND
4-PI CALIBRATION SYSTEM
PIN BLOCK - SLIDE PLATE GUIDE

PAT CLEAR	DWG TYPE	SHOWN ON	SCALE: 2X
	DETAIL		DO NOT SCALE PRINTS
MICROFILMED	DESIGN ACCT NO	CATEGORY CODE KA0001	DWG NO 27A1142 REV