Officially Released to the LBNL Document Control Center
Released: October 20th, 2004 DCC Auth Key: IGFPZI0EZZ
Downloaded by: Karsten M Heeger at October 26, 2004 14:41:03

REQD	ITEM	PART NO.	DESCRIPTION
			304 STAINLESS STEEL

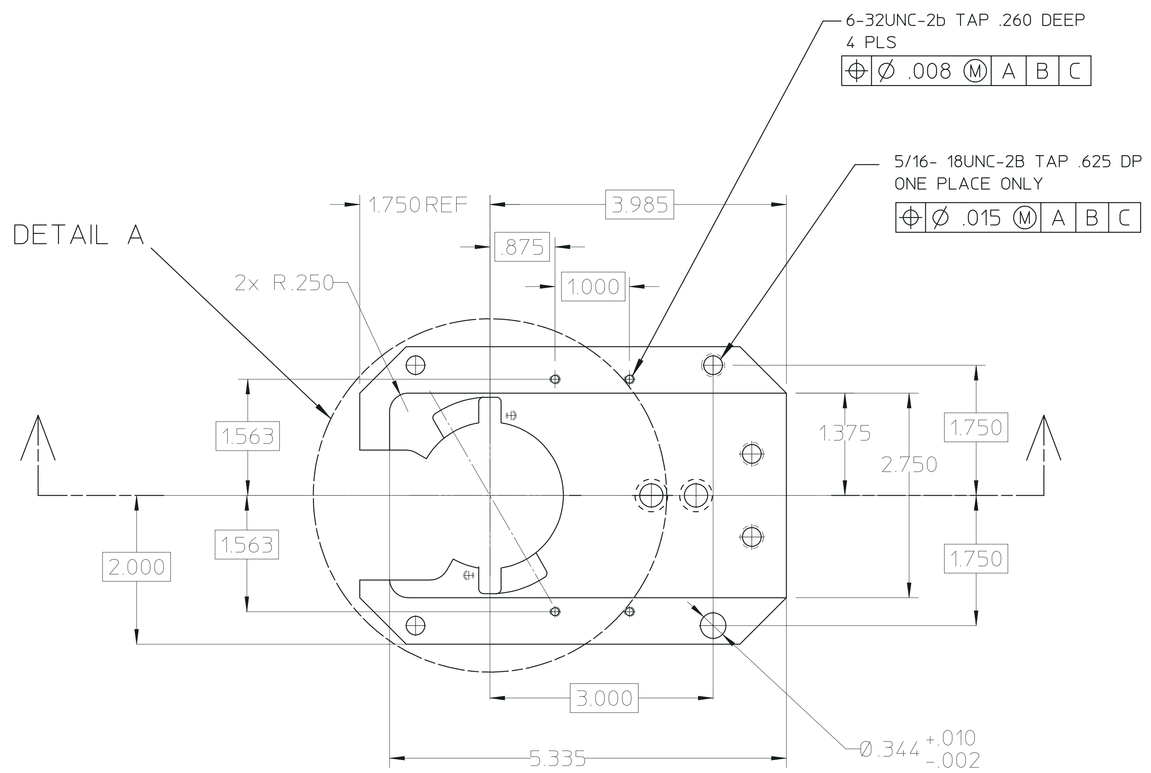

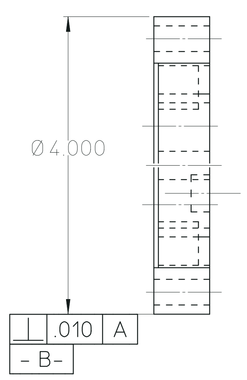

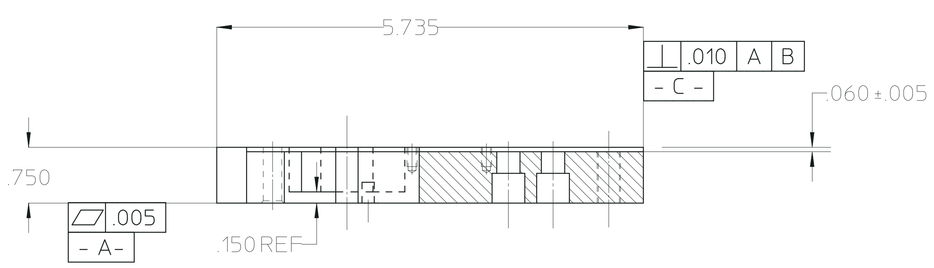

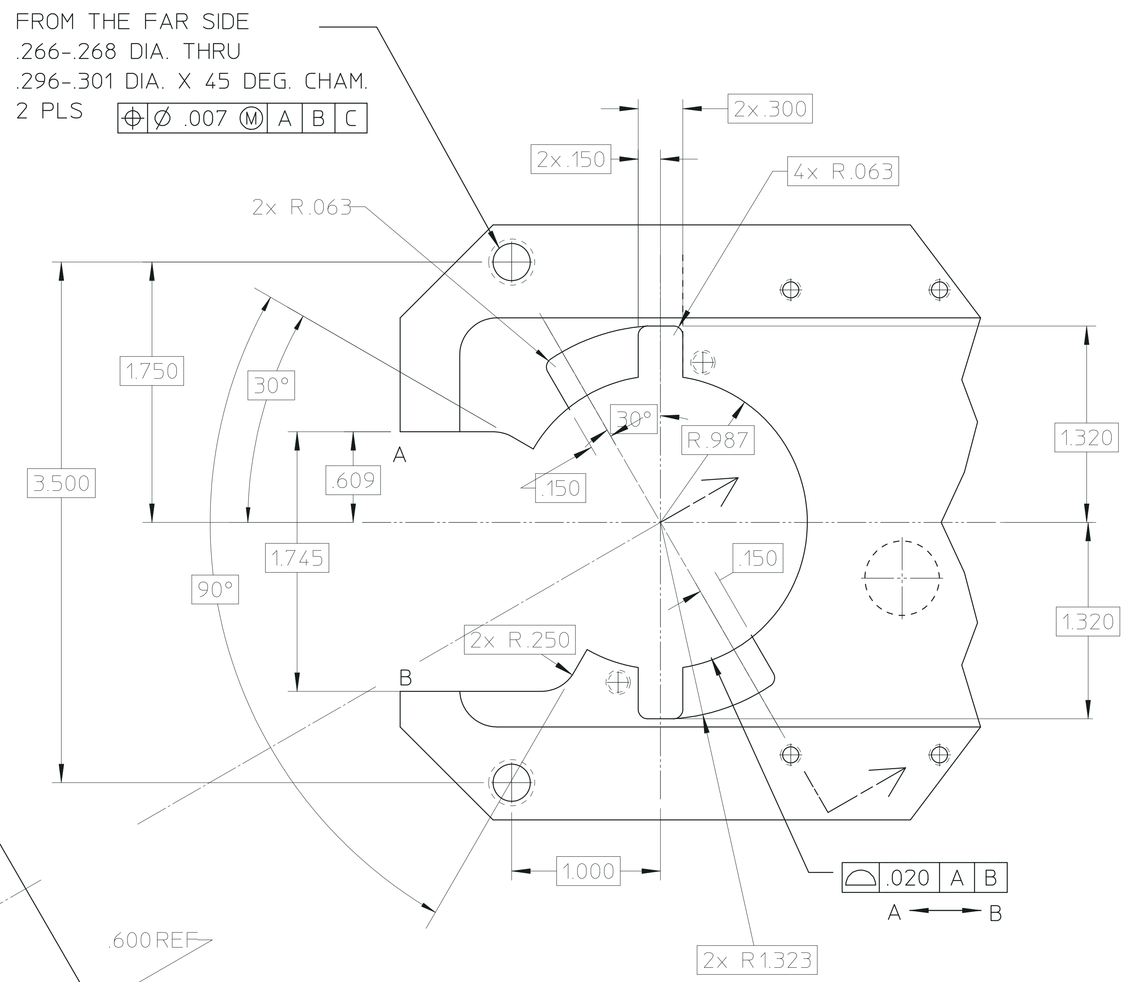

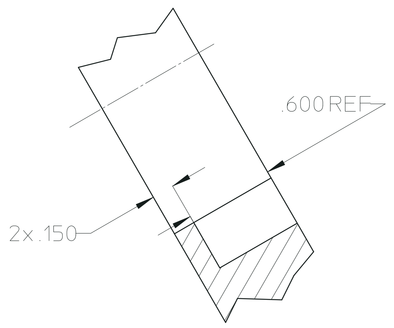

DETAIL A
SCALE: 2X

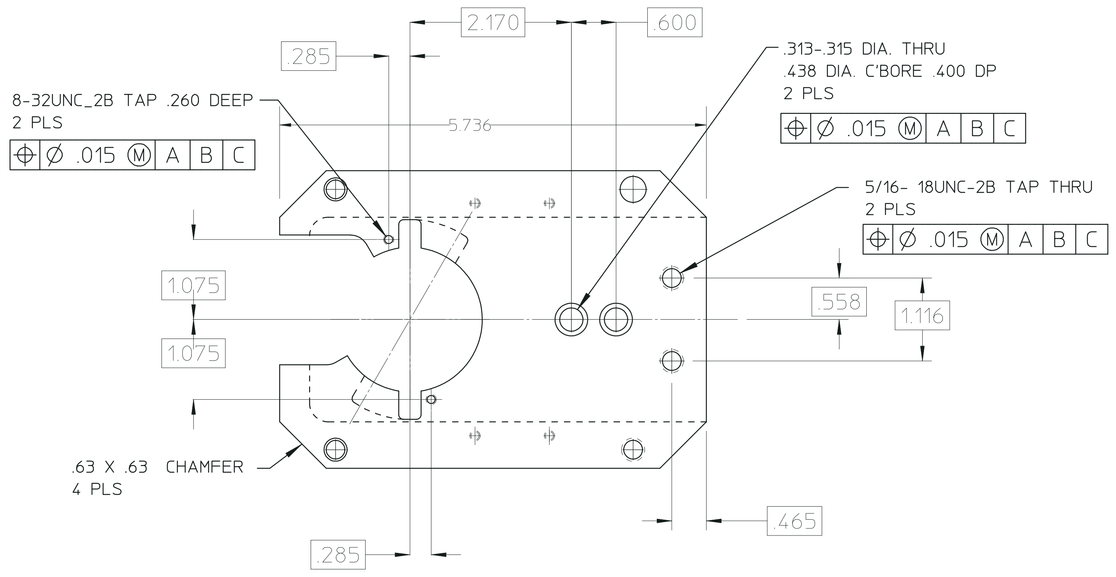

TWO DIFFERENT VIEWS OF THE SAME PART

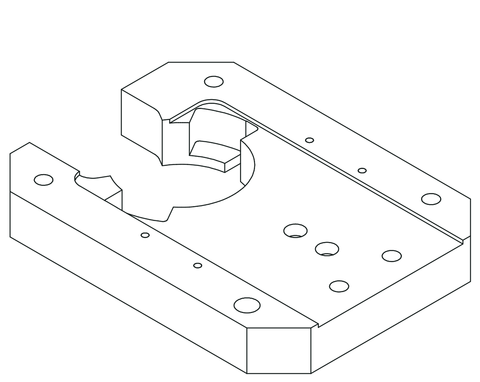

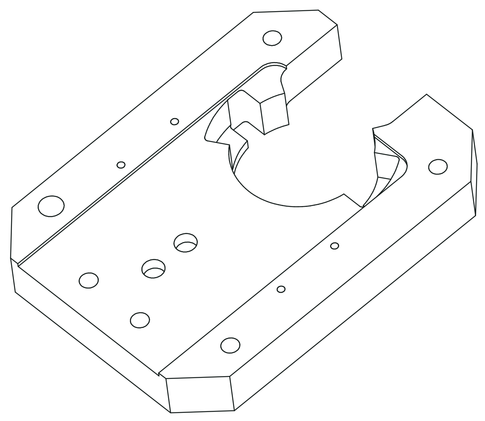

27A1106

NOTE: 1. ALL DIMENSIONS ARE IN INCHES.

REV	DWG	CHK	ZONE	DATE	CHANGES

UNLESS OTHERWISE SPECIFIED
TOLERANCES: .X ± .1 FRAC. ±1/64; .XX ± .03 ANGLES ± 1°; .XXX ± .015 FINISH 63
THREADS ARE CLASS 2
CHAMFER ENDS OF ALL SCREW THREADS 30°.
CUT 1.5 PITCH THRD RELIEF WITH ROUND NOSE TOOL ON MACHINE CUT THREADS.
BREAK EDGES .016 MAX. ON MACHINED WORK.
REMOVE BURRS WELD SPLATTER & LOOSE SCALE
REFERENCES: ANSI Y14.5 & B46.1

SHOP ORDERS
ACCT. NO. | SERIAL NO.
DATE ISSD | DATE REQD. | NO REQD.
DELIVER TO
SURFACE TREATMENT: DEGREASE
IDENT. METH.: TAG
DWG. BY: MIANMIHARA | DATE: 11-10-02
CHK. BY | DATE

LAWRENCE BERKELEY LABORATORY
UNIVERSITY OF CALIFORNIA-BERKELEY

KAMLAND
4-PI CALIBRATION SYSTEM
PIN BLOCK - REMOVABLE MOUNTING BLOCK

PATENT CLEAR | DWG. TYPE: DETAIL | SHOWN ON | SCALE: FULL | DO NOT SCALE PRINTS
MICROFILMED | DESIGN ACCT. NO | CATEGORY CODE: KA0001 | DWG. NO.: 27A1106 | SIZE | REV.