Officially Released to the LBNL Document Control Center
Released: October 20th, 2004 DCC Auth Key: GYINT528TH
Downloaded by: Karsten M Heeger at October 26, 2004 14:40:41

REQ	ITEM	PART NUMBER	DESCRIPTION
A/R	1		304 STAINLESS STEEL
2	2	27A1083	PIN BLOCK - TUBE SEGMENT GUIDE
2	3		DOWEL PIN, 1/4 DIA. X 1/2" LONG, SST.

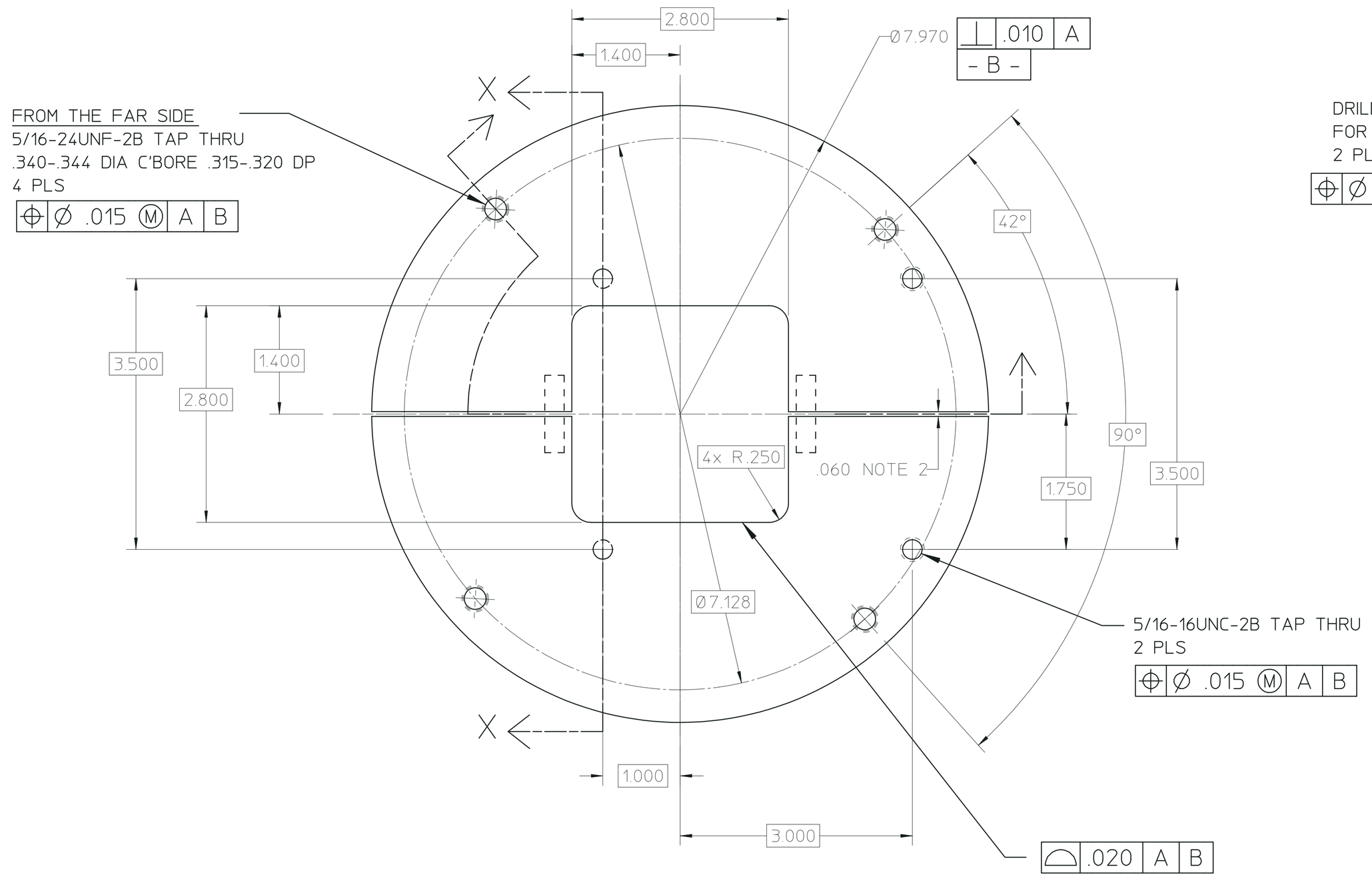

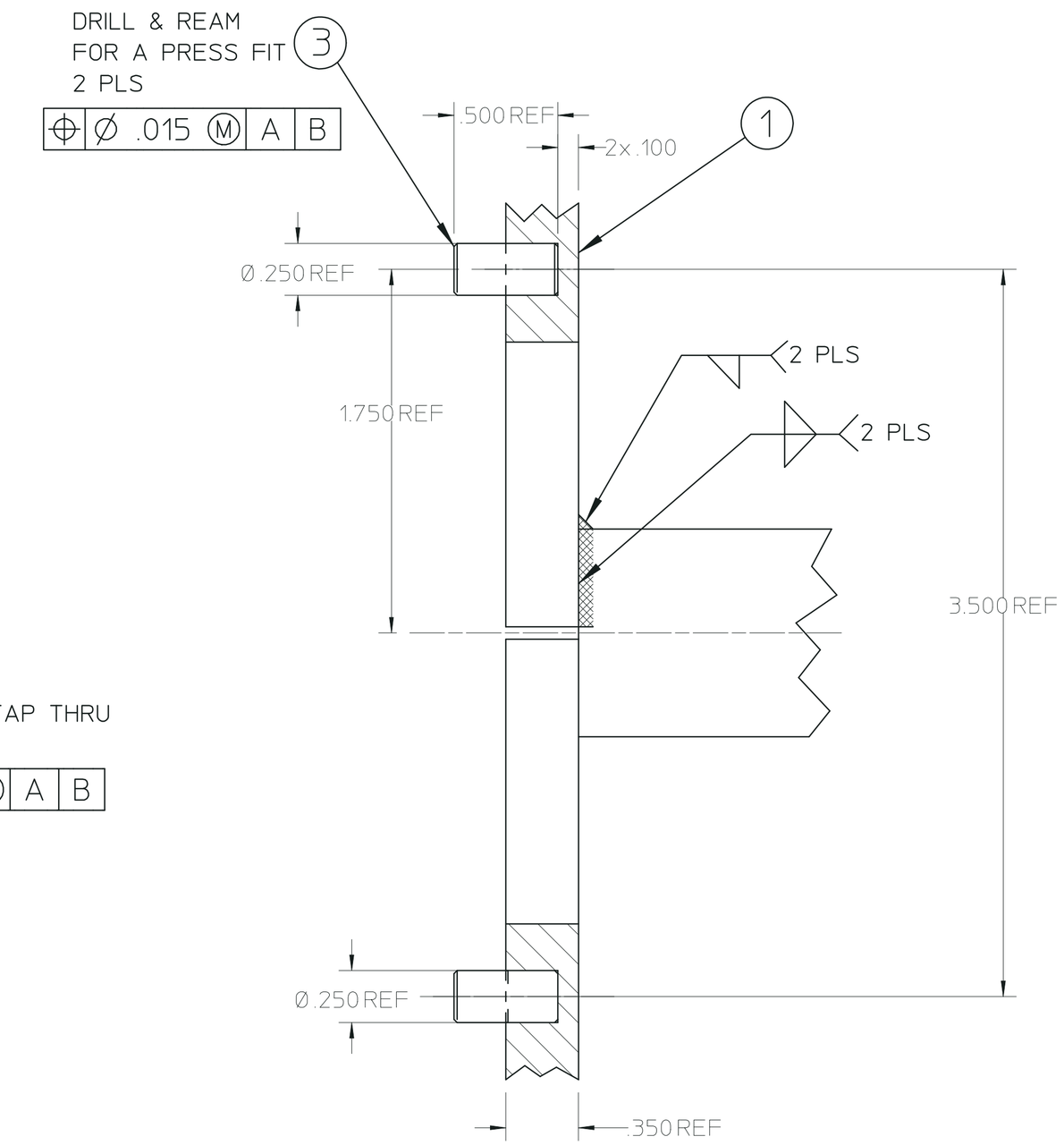

SECTION X - X
SCALE: 2X

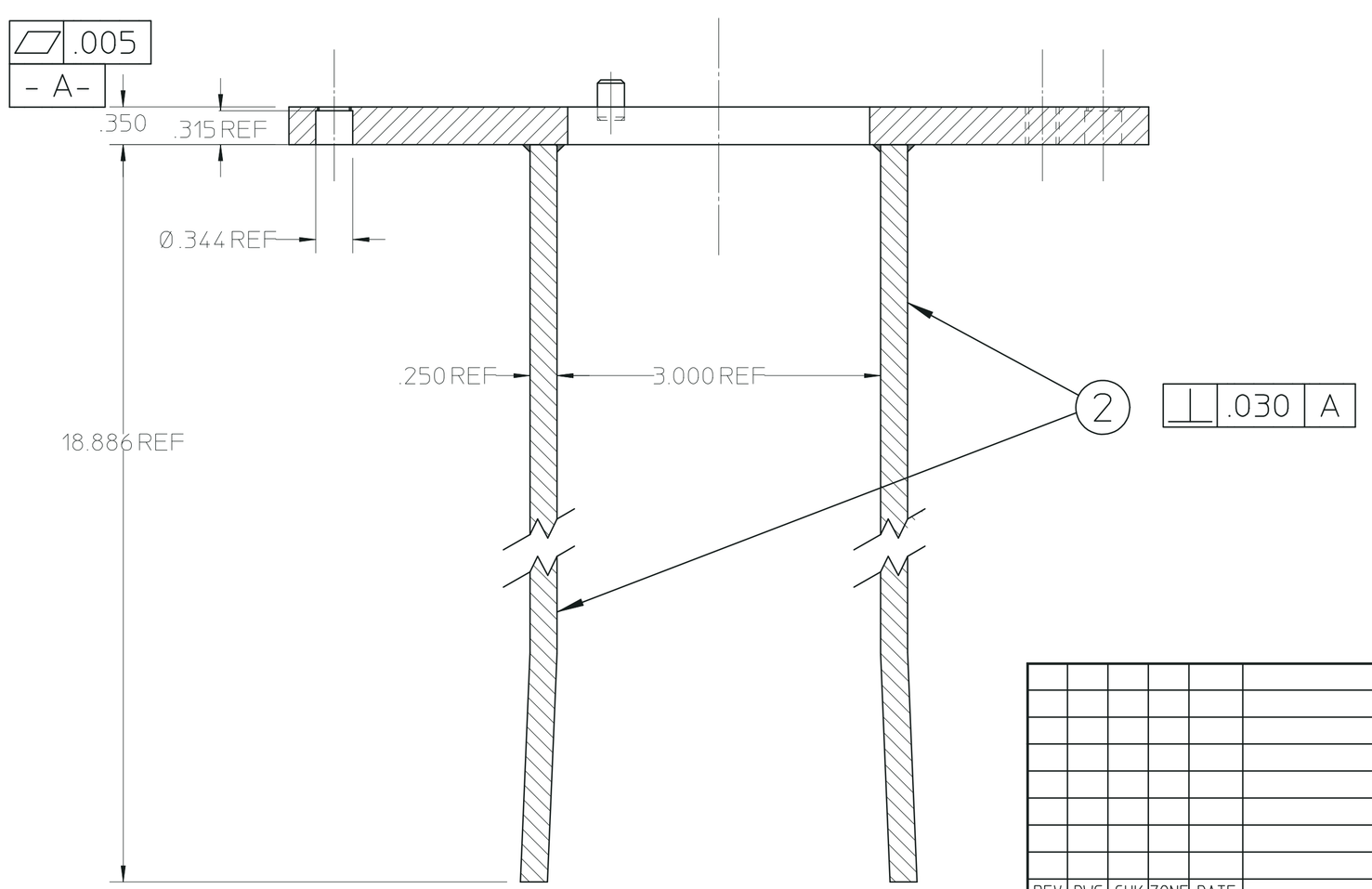

27A1094

NOTE: 1. ALL DIMENSIONS ARE IN INCHES.
2. MACHINE THE FINISHED PART INTO TWO HALVES. THE TWO HALVES MUST STILL MEET TOLERANCES AFTER MACHINING.

REV	DWG	CHK	ZONE	DATE	CHANGES

UNLESS OTHERWISE SPECIFIED
TOLERANCES: .X ± .1 FRAC. ± 1/64; .XX ± .03 ANGLES ± 1°; .XXX ± .015 FINISH 125√
THREADS ARE CLASS 2
CHAMFER ENDS OF ALL SCREW THREADS 30°
CUT 1.5 PITCH THRD RELIEF WITH ROUND NOSE TOOL ON MACHINE CUT THREADS.
BREAK EDGES .016 MAX. ON MACHINED WORK
REMOVE BURRS WELD SPLATTER & LOOSE SCALE
REFERENCES: ANSI Y14.5 & B46.1.

SHOP ORDERS
ACCT. NO. | SERIAL NO.
DATE ISSD. | DATE REQD. | NO. REQD.
DELIVER TO
SURFACE TREATMENT: DEGREASE
IDENT. METH.: TAG
DWG. BY: Y. MINAMIHARA DATE: 10-21-03
CHK. BY | DATE

LAWRENCE BERKELEY LABORATORY
UNIVERSITY OF CALIFORNIA-BERKELEY
KAMLAND
4-PI CALIBRATION SYSTEM
PIN BLOCK - SPLIT MOUNTING PLATE

PATENT CLEAR	DWG. TYPE	SHOWN ON	SCALE	DO NOT SCALE PRINTS
	DETAIL		FULL	
MICROFILMED	DESIGN ACCT. NO.	CATEGORY CODE	DWG. NO.	SIZE / REV.
		KA0001	27A1094	