Officially Released to the LBNL Document Control Center
Released: October 20th, 2004 DCC Auth Key: 26HKEPR0JK

Downloaded by: Karsten M Heeger at October 26, 2004 14:40:51

REQ	ITEM	PART NUMBER	DESCRIPTION
			304 STAINLESS STEEL

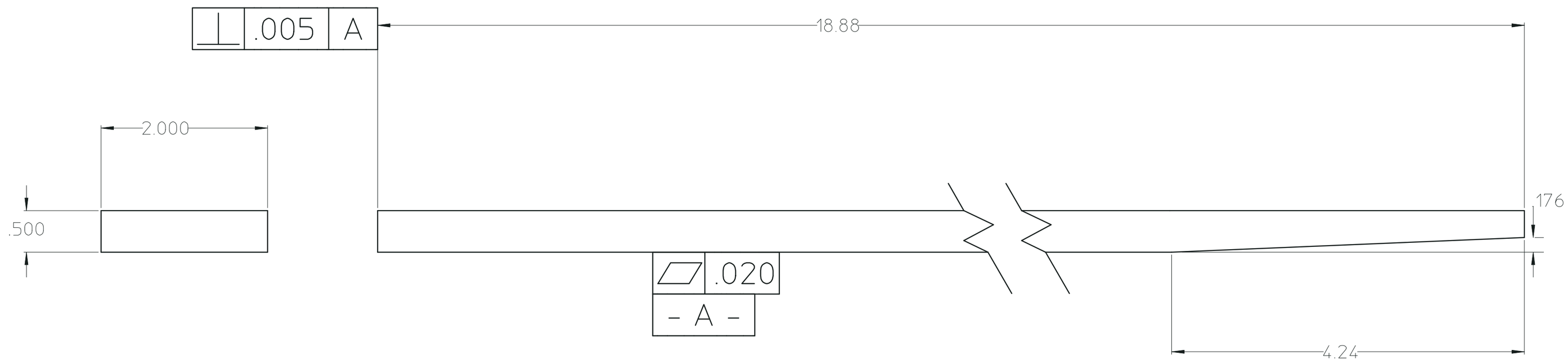

27A1083

NOTE: ALL DIMENSIONS ARE IN INCHES.

REV	DWG	CHK	ZONE	DATE	CHANGES

UNLESS OTHERWISE SPECIFIED

TOLERANCES			
	.X ± .1	FRAC. ±1/64	
	.XX ± .03	ANGLES ±.01°	
	.XXX ± .015	FINISH 63 √	

THREADS ARE CLASS 2
CHAMFER ENDS OF ALL SCREW THREADS 30°.
CUT 1.5 PITCH THRD RELIEF WITH ROUND NOSE TOOL ON MACHINE CUT THREADS.
BREAK EDGES .016 MAX. ON MACHINED WORK
REMOVE BURRS WELD SPLATTER & LOOSE SCALE
REFERENCES: ANSI Y14.5 & B46.1.

SHOP ORDERS

ACCT. NO.		SERIAL NO.	
DATE ISSD	DATE REQD.	NO. REQD.	
DELIVER TO			
SURFACE TREATMENT	DEGREASE		
IDENT. METH.	TAG		
DWG. BY	Y. MINAMIHARA	DATE	10-21-03
CHK. BY		DATE	

LAWRENCE BERKELEY LABORATORY
UNIVERSITY OF CALIFORNIA-BERKELEY

KAMLAND

4-PI CALIBRATION SYSTEM

PIN BLOCK - TUBE SEGMENT GUIDE

PATENT CLEAR	DWG. TYPE	SHOWN ON	SCALE	DO NOT SCALE PRINTS
	DETAIL		2X	
MICROFILMED	DESIGN ACCT. NO.	CATEGORY CODE	DWG. NO.	SIZE / REV.
		KA0001	27A1083	A