Officially Released to the LBNL Document Control Center
Released: October 19th, 2004 DCC Auth Key: QPKE8NS2H7
Downloaded by: Karsten M Heeger at October 26, 2004 14:44:10

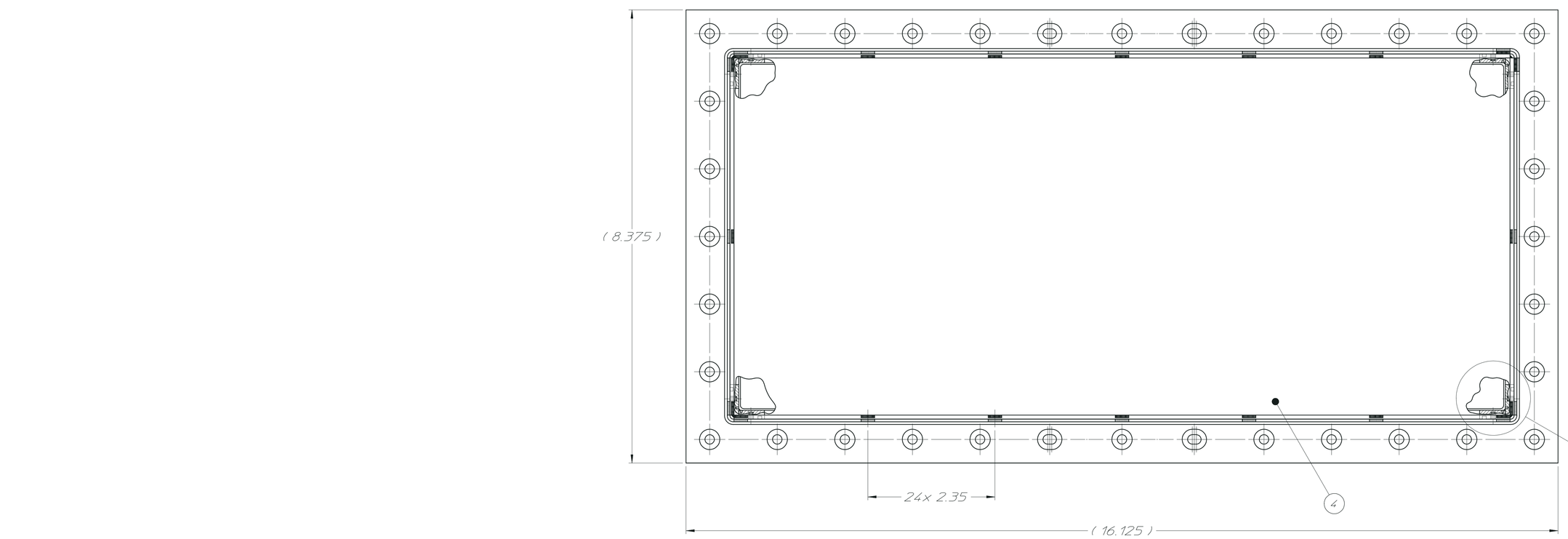

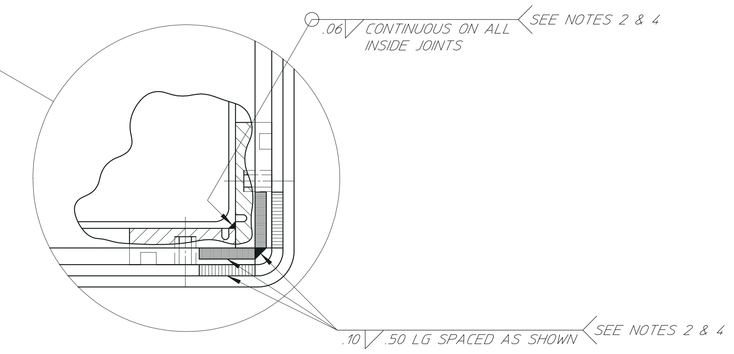

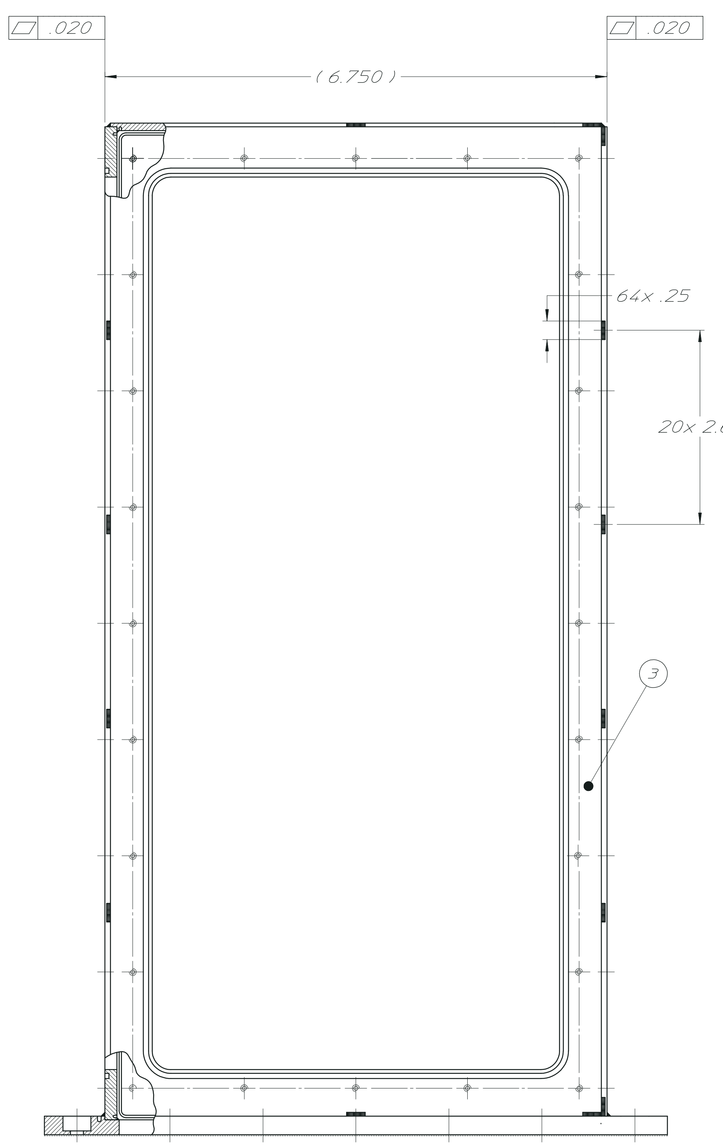

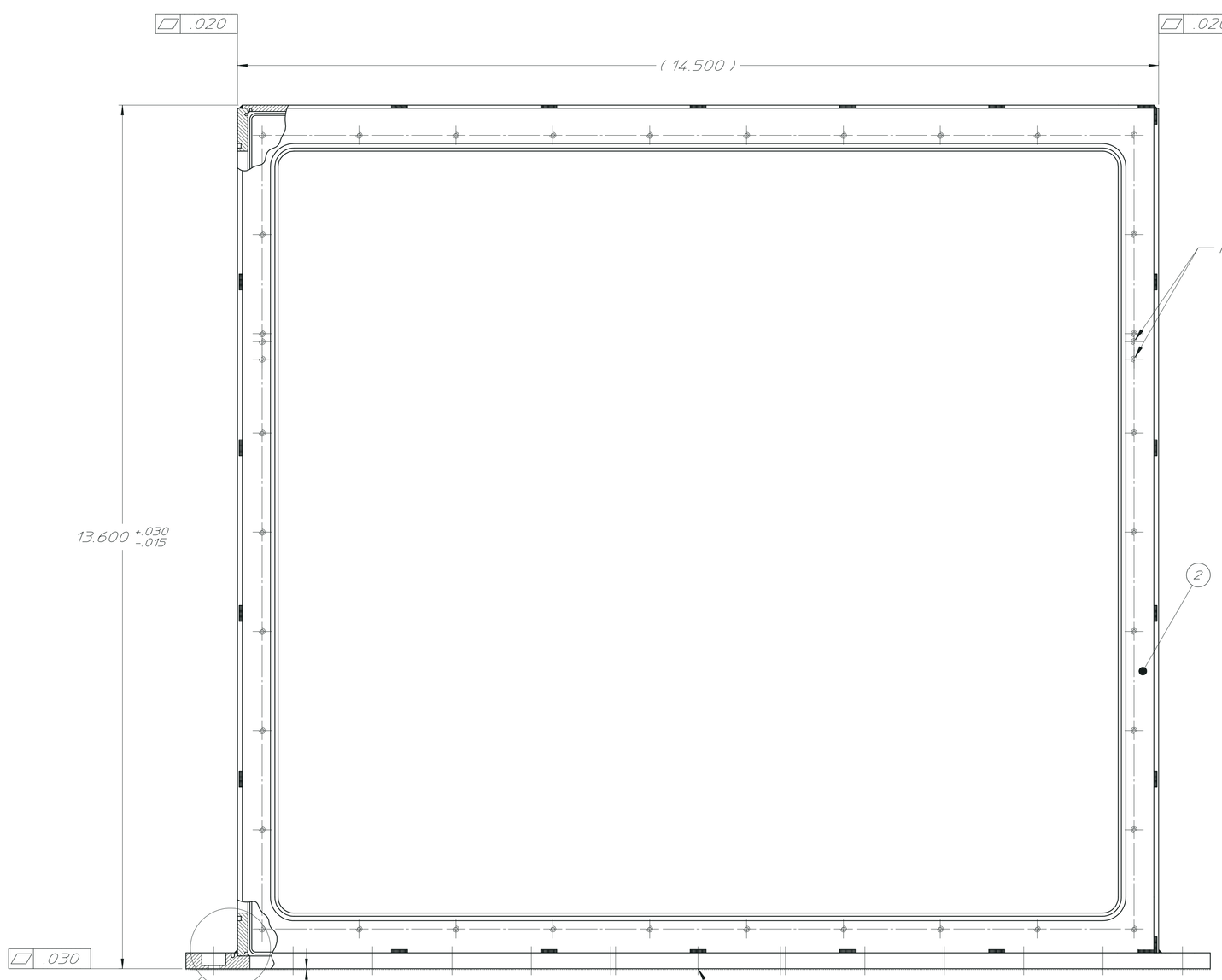

POSITION ITEM 2 ON BOTH SIDES SO THESE 8 INTERIOR TAPPED HOLES ARE AT THE LOCATIONS SHOWN

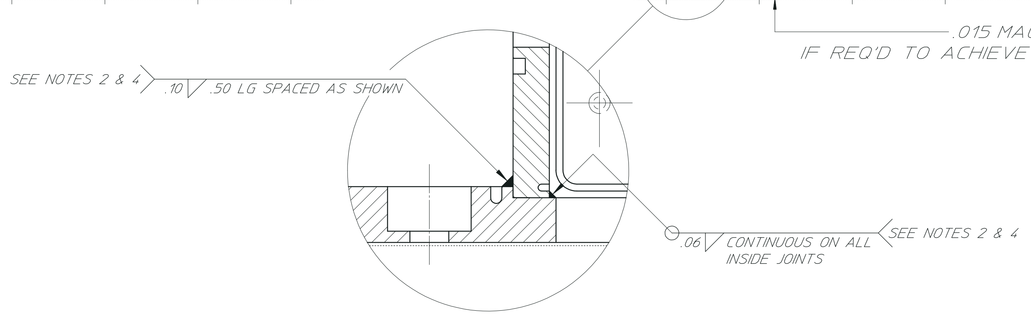

NOTES:

1. DEGREASE ALL PARTS PRIOR TO WELDING.
2. WELD JOINTS ARE TO BE MADE USING GAS TUNGSTEN-ARC WELDING (GTAW) & ARE TO BE VAC-TIGHT.
3. O-RINGS ARE TO BE MADE OF .139 DIA BUNA-N STOCK. LBNL WILL REPLACE LATER WITH VITON O-RINGS.
4. INSTALL O-RINGS & ACRYLIC COVERS 27A1064 & 27A1074 & VACUUM LEAK CHECK WITH HELIUM LEAK DETECTOR. LBNL WILL SUPPLY SPECIAL WASHERS FOR ACRYLIC COVERS. VENDOR IS TO PROVIDE BASE COVER PLATE FOR LEAK CHECKING. LEAK CHECK WITH A MAX INTERNAL HELIUM PRESSURE OF 0.25 PSIG. DO NOT EXCEED 0.25 PSIG. DO NOT PUMP A VACUUM IN THIS CONTAINER, AS IT IS NOT DESIGNED TO WITHSTAND ATMOSPHERIC PRESSURE WITH AN INTERNAL VACUUM. TOTAL LEAK RATE SHALL NOT EXCEED 1×10^{-9} STD. ATM. CC/SEC.
5. LBNL WILL CLEAN FINISHED WELDMENT.
6. DIMENSIONING & TOLERANCING IS PER ASME Y14.5M-1994. ALL DIMENSIONS ARE IN INCHES. REFERENCE DIMENSIONS ARE SHOWN IN PARENTHESIS.
7. ESTIMATED WT. = 83 LBS.

27A1056

REQD	ITEM	PART NO.	DESCRIPTION
1	4	27A1044	GLOVEBOX EXTENSION TOP PLATE
2	3	27A1036	GLOVEBOX EXTENSION SIDE PLATE No. 2
2	2	27A1026	GLOVEBOX EXTENSION SIDE PLATE No. 1
1	1	27A1016	GLOVEBOX EXTENSION BASE PLATE

REV	DWG	CHK	ZONE	DATE	CHANGES

UNLESS OTHERWISE SPECIFIED
TOLERANCES: .X ± ---; .XX ± .03; .XXX ± .015; FRAC. ± 1/64; ANGLES ± 2°; FINISH 63
THREADS ARE CLASS 2
CHAMFER ENDS OF ALL SCREW THREADS 30°.
CUT 1.5 PITCH THRD RELIEF WITH ROUND NOSE TOOL ON MACHINE CUT THREADS.
BREAK EDGES .016 MAX. ON MACHINED WORK.
REMOVE BURRS WELD SPLATTER & LOOSE SCALE
REFERENCES: ANSI Y14.5 & B46.1.

SHOP ORDERS
ACCT. NO. | SERIAL NO.
DATE ISSD | DATE REQD | NO. REQD
DELIVER TO
SURFACE TREATMENT: SEE NOTES 1 & 5
IDENT. METH.
DWG. BY: S.R. ABBOTT — DATE: 10-20-02
CHK. BY: K. HEEGER — DATE: 10-20-02

LAWRENCE BERKELEY LABORATORY
UNIVERSITY OF CALIFORNIA-BERKELEY

KAMLAND
4-PI CALIBRATION SYSTEM
GLOVEBOX EXTENSION WELD ASSEMBLY

PATENT CLEAR | DWG. TYPE: DETAIL | SHOWN ON | SCALE 1:2 & 1.5:1 | DO NOT SCALE PRINTS
MICROFILMED | DESIGN ACCT. NO. | CATEGORY CODE: KA0001 | DWG. NO. 27A1056 | SIZE | REV.