Officially Released to the LBNL Document Control Center
Released: October 19th, 2004 DCC Auth Key: EINX86DNKP
Downloaded by: Karsten M Heeger at October 26, 2004 14:43:47

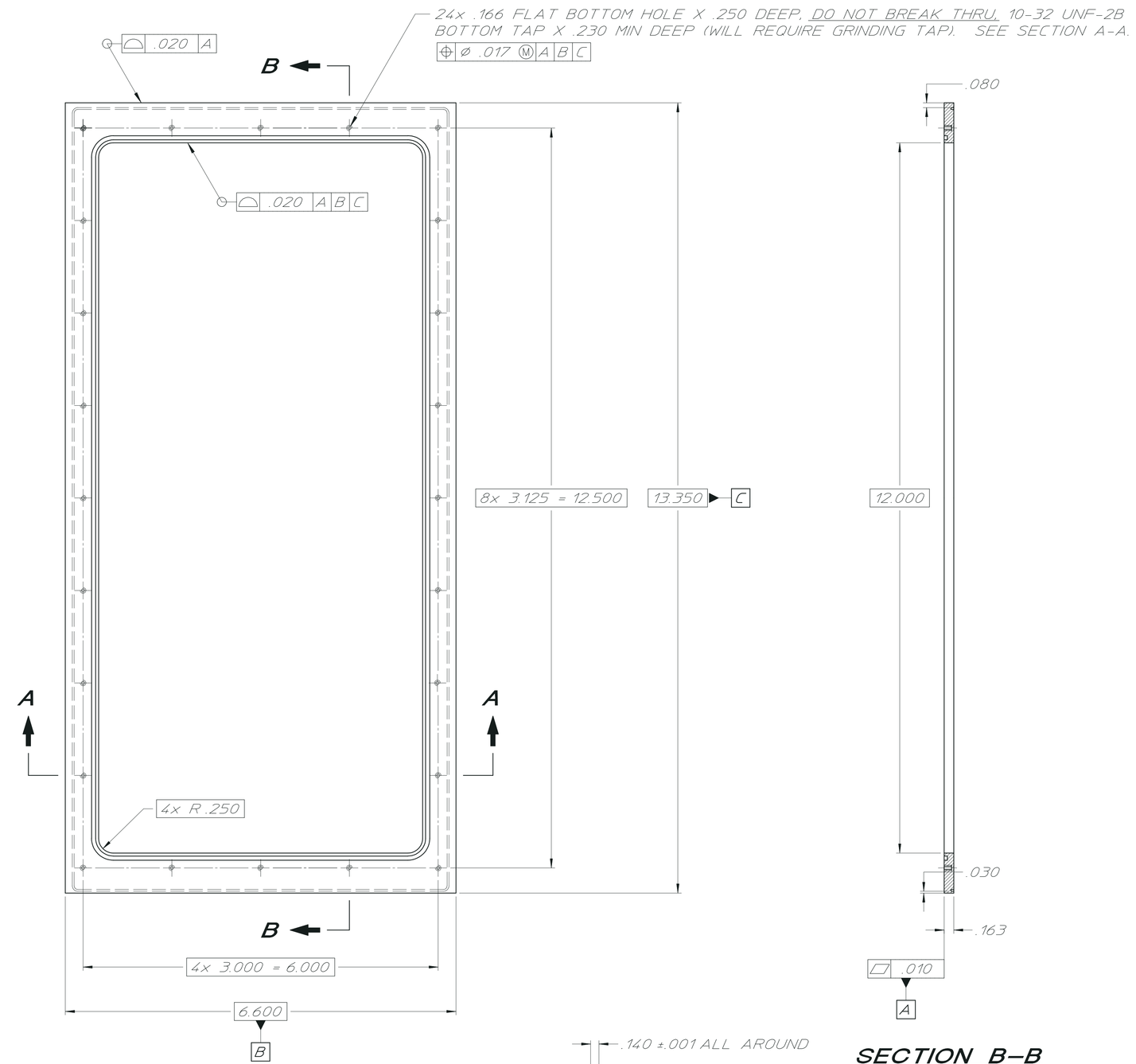

SECTION B–B

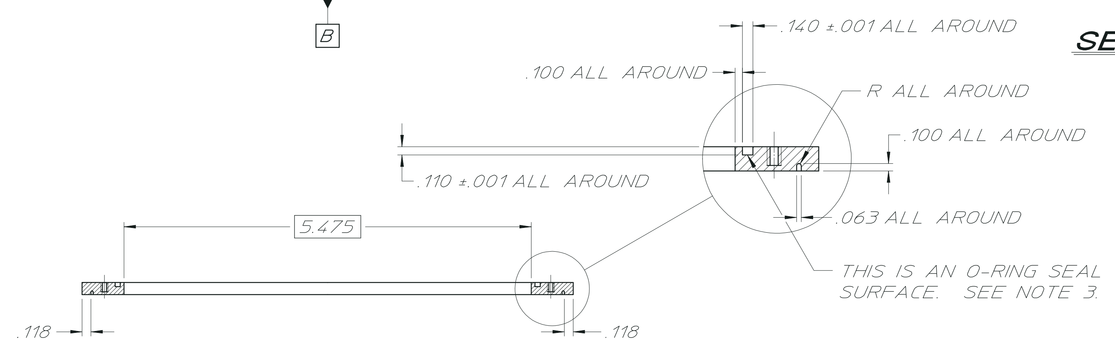

SECTION A–A

NOTES:

1. THIS PART IS TO BE MACHINED FROM A SINGLE PLATE. THERE ARE TO BE NO WELD JOINTS. ALL SURFACES ARE TO BE MACHINED OR GROUND. STOCK OR SAW-CUR SURFACES ARE NOT ACCEPTABLE.
2. UNLESS OTHERWISE SPECIFIED, ALL INSIDE CORNER RADII ARE .010 MAX & CHAMFER ALL EDGES .020 X 45°.
3. THERE ARE TO BE NO TRANSVERSE SCRATCHES OR TOOL MARKS ON THE BOTTOM SURFACE OF THE O-RING GROOVE
4. DIMENSIONING & TOLERANCING IS PER ASME Y14.5M-1994. ALL DIMENSIONS ARE IN INCHES. REFERENCE DIMENSIONS ARE SHOWN IN PARENTHESIS.
5. ESTIMATED WT. = 8 LBS.

27A1036

REQD	ITEM	PART NO.	DESCRIPTION
			PLATE, 304 S.S.

REV	DWG	CHK	ZONE	DATE	CHANGES

UNLESS OTHERWISE SPECIFIED
TOLERANCES: X ± --- FRAC. ± 1/64; XX ± .03 ANGLES ± 2°; XXX ± .015 FINISH 63µ
THREADS ARE CLASS 2. CHAMFER ENDS OF ALL SCREW THREADS 30°. CUT 1.5 PITCH THRD RELIEF WITH ROUND NOSE TOOL ON MACHINE CUT THREADS. BREAK EDGES .016 MAX. ON MACHINED WORK. REMOVE BURRS. WELD SPLATTER & LOOSE SCALE. REFERENCES: ANSI Y14.5 & B46.1.

SHOP ORDERS: ACCT. NO. | SERIAL NO. | DATE ISSD | DATE REQD | NO. REQD | DELIVER TO
SURFACE TREATMENT: DEGREASE
IDENT. METH.
DWG. BY: S.R. ABBOTT DATE: 10-20-03
CHK. BY: K. HEEGER DATE: 10-20-03

LAWRENCE BERKELEY LABORATORY
UNIVERSITY OF CALIFORNIA-BERKELEY
KAMLAND
4-PI CALIBRATION SYSTEM
GLOVEBOX EXTENSION SIDE PLATE No. 2

PATENT CLEAR | DWG. TYPE: DETAIL | SHOWN ON | SCALE 1:2 & 1:1 | DO NOT SCALE PRINTS
MICROFILMED | DESIGN ACCT. NO. | CATEGORY CODE: KA0001 | DWG. NO. 27A1036 | SIZE | REV.