Connectors and Cabling for the KamLAND 4pi Deployment Hardware and Control Systems

Work-In-Progress - August 5, 2004

A. Franck, F. Gray, K. Heeger and the 4pi Group

Summary

This document describes the cabling and connections between the 4pi deployment system inside the glovebox and the control systems outside the glovebox. An overview of all systems and their connections is given in Figure 1. The second figure shows the schematic of the cabling and connections of the 4pi deployment hardware inside the glovebox.

The electrical systems inside the glovebox include:

1. Motor control
2. Motor power
3. Encoder readout for cable guide pulleys
4. Slip rings of control cable spools
5. Optical reset switches for encoder pulleys

Items 1-4 will be enclosed in individual stainless steel enclosures to protect them from the liquid scintillator vapor in the glovebox.

Signal and power for the above listed items is routed out of the motor enclosure, the slip ring enclosure, and the encoder pulley enclosure with appropriate feedthroughs. Teflon cables connect from the enclosures to a feedthrough backplate of the glovebox where the connections are made to the outside.

Much of the control system hardware is contained in a small rack cabinet that we intend to place in the electronics hut. It has standard 19 inch side rails; some items are secured to a mounting bracket strip, while others are positioned on a shelf. It contains the motor controller, motor drive units, and other miscellaneous items, all detailed in Table 2. A diagram that illustrates the internal connections within the control enclosure appears in Figure 2. The types of cables used in the enclosure are shown in Table 1.

This document details the cables, connectors, and feedthroughs used for making these connections and the control hardware.

Figure 1: Overview of the electrical control components for the 4pi full-volume calibration system and their placement with respect to the glovebox.

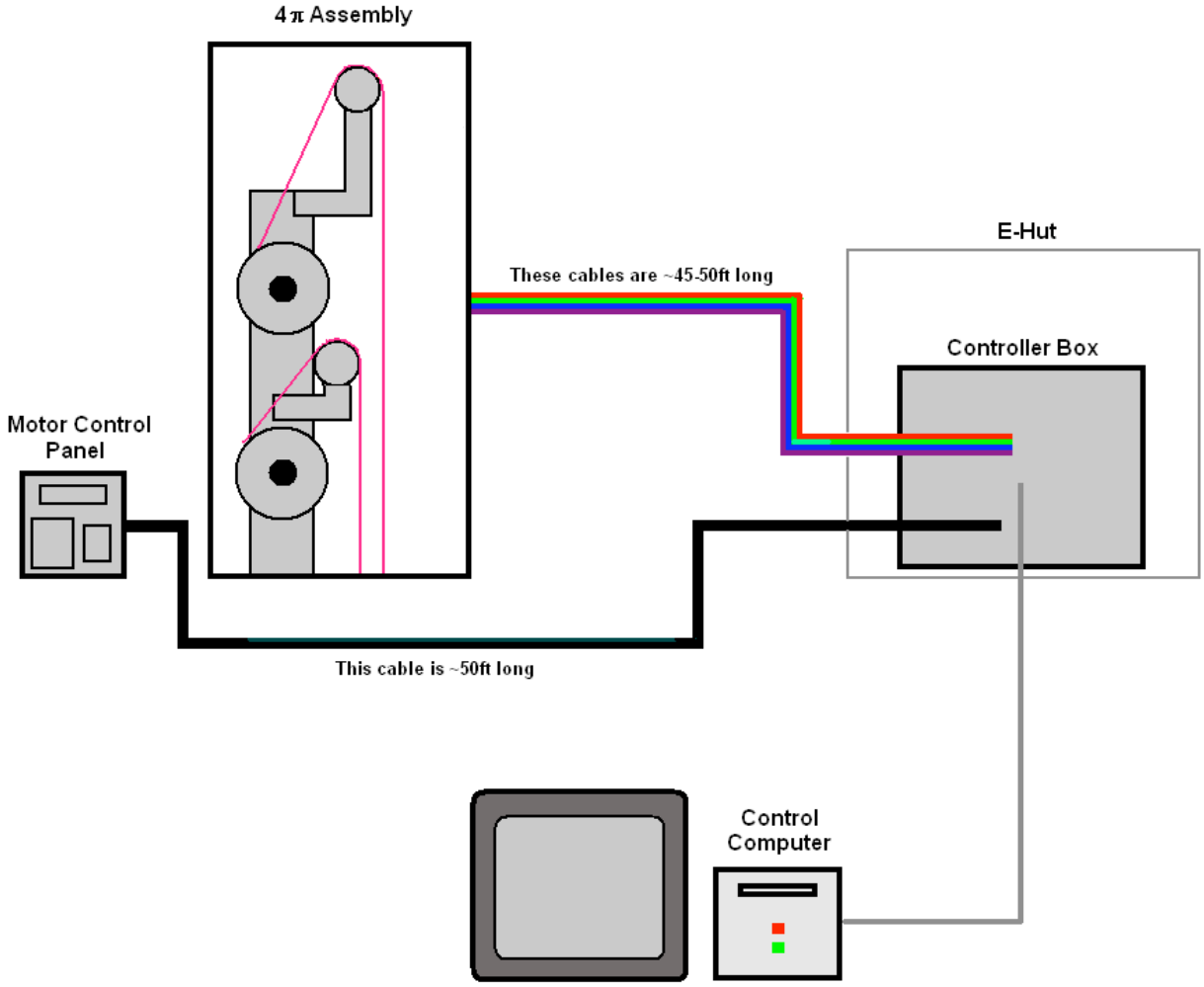

Figure 2: Block diagram of components contained in control enclosure.

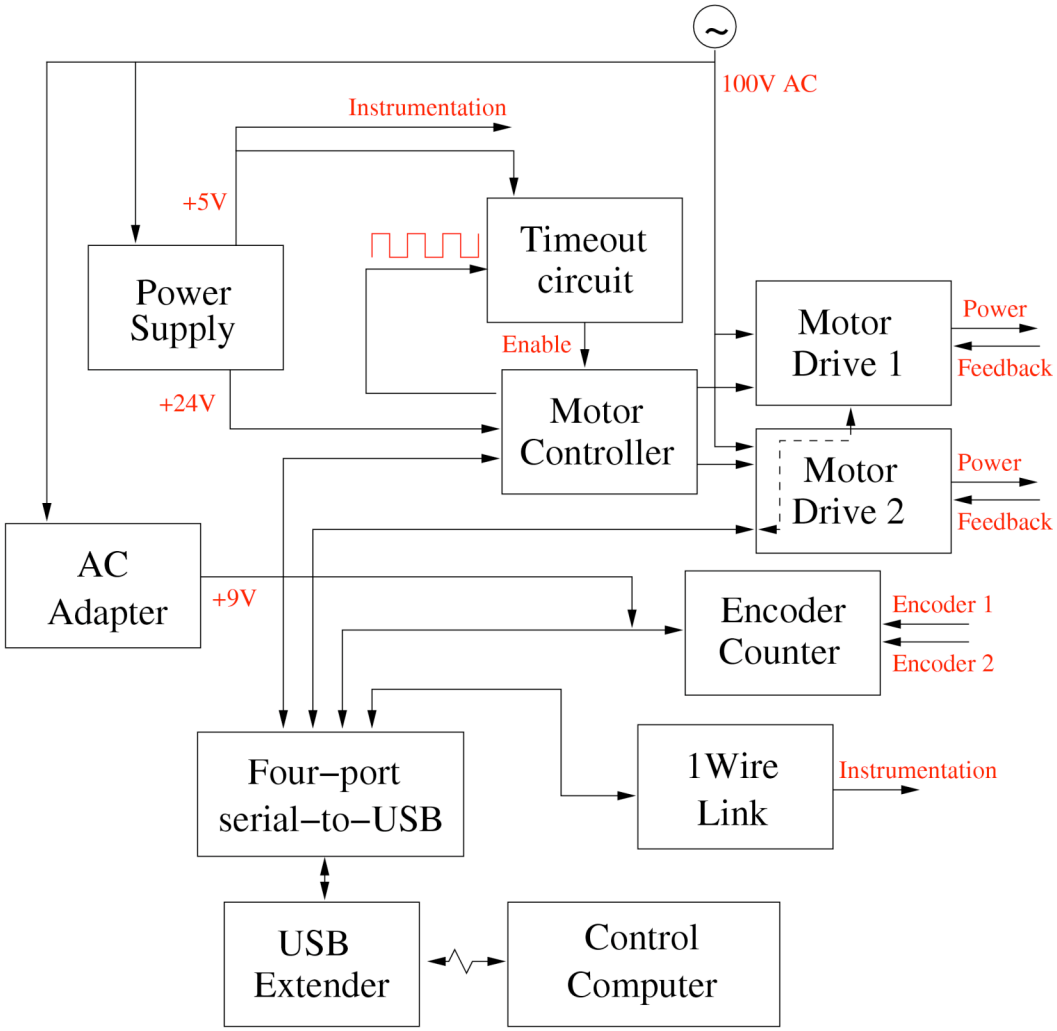

Figure 3: Schematic of the cabling and connections of the 4pi deployment hardware. The optical reset switches for the encoders are not yet included in this diagram. The connections between the motor controllers and the manual and computer control panel will be detailed in a separate figure.

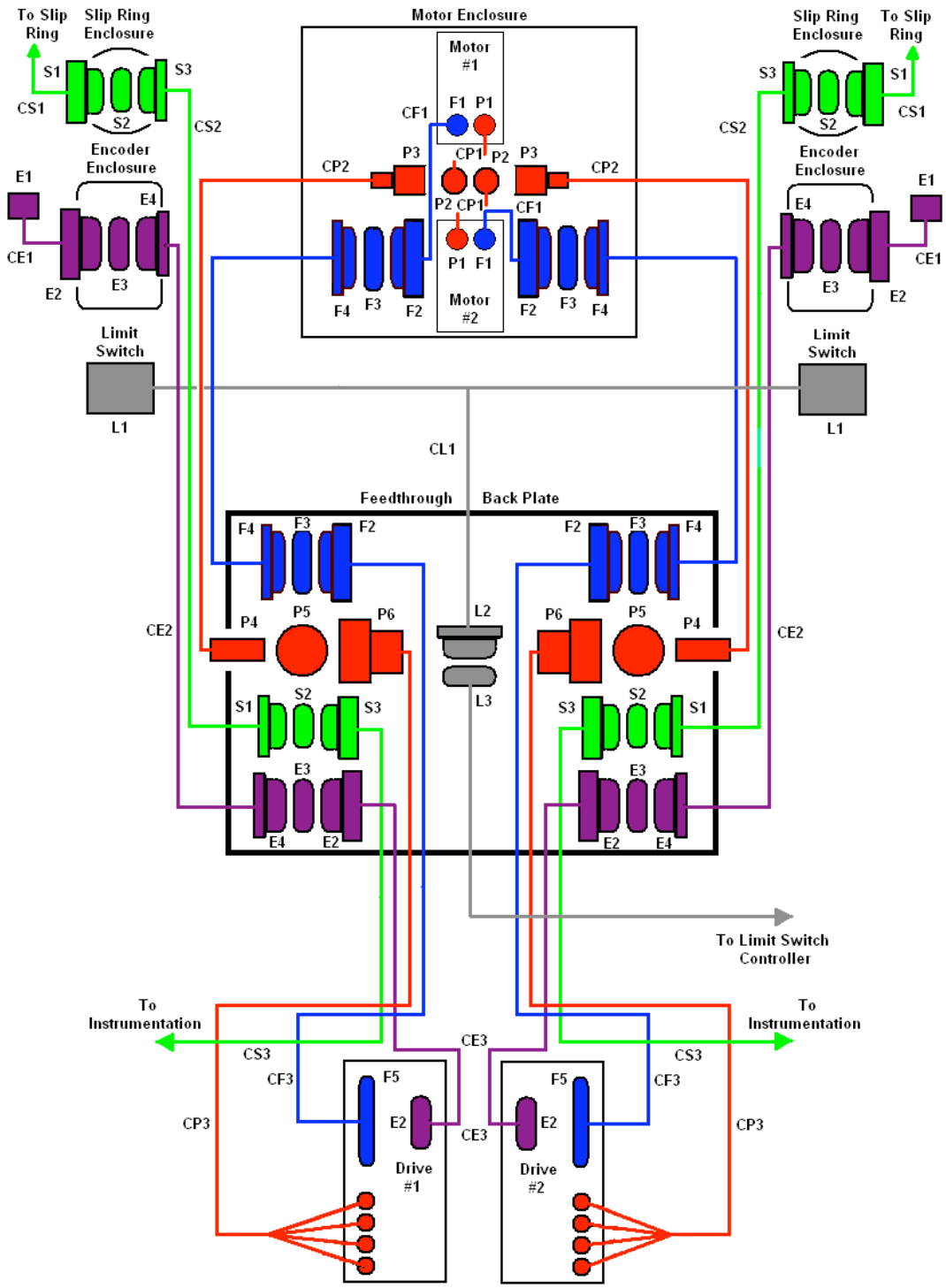

Table 1: Hardware to be placed in control enclosure.

Description	**Manufacturer/model**	**Quantity**
Motor controller	Parker Compumotor 6K4	1
Motor drive	Parker Compumotor Gemini GV	2
Motor drive daisy chain box	Custom	1
Encoder counter	US Digital ED2	1
RS232 adapter for encoder counter	US Digital AD2-B	1
AC adapter for encoder counter	US Digital PS-9V	1
Four-port RS232-to-USB	Keyspan USA-49WLC	1
USB Extender	Lindy 42801	1
Timeout circuit	Custom, based on Maxim MAX693CPE	1
1Wire Link	iButtonLink Link 45i	1
Low voltage power supply	Tenma 72-6628	1
Control computer	MaxOpen IDEQ 200N (Athlon XP2400+)	1

Table 3: Cables within control enclosure.

Description	**Type**
All serial cables	DB-9/DB-9
USB Extender	Category 5 twisted pair (i.e. Ethernet cable)
Motor controller to drives	Parker Compumotor 71-016137-10
All 100 VAC connections	Standard AC power cables
Others	Typically discrete wires

Table 2: Table of cables and connections used in the electrical layout as shown in Figure 3.

Pulley Encoder	**Cable**
CE1	Encoder to In-glovebox feedthrough, ~6 in.
CE2	In-glovebox feedthrough to Out-glovebox feedthrough, ~4 ft.
CE3	Out-glovebox feedthrough to Motor drive, ~50 ft.
-------	**Connector**
E1	Framatome 65039-032 (or equiv.)
E2	Tyco Electronics/Amp Type 205205-1 (or equiv. D-Sub15)
E3	Ceramaseal 16801-01-W
E4	Ceramaseal 16811-01-A
Slip Ring	**Cable**
CS1	Slip-Ring to In-glovebox feedthrough, ~12 in.
CS2	In-glovebox feedthrough to Out-glovebox feedthrough, ~3.5 ft.
CS3	Out-glovebox feedthrough to Instrumentation, ~50 ft.
-------	**Connector**
S1	Tyco Electronics/Amp Type 205203-1 (or equiv. D-Sub 9)
S2	Ceramaseal 16800-01-W
S3	Ceramaseal 16810-01-A
Motor Feedback	**Cable**
CF1	Motor Feedback to In-glovebox feedthrough, ~6 in.
CF2	In-glovebox feedthrough to Out-glovebox feedthrough, ~3.5 ft.
CF3	Out-glovebox feedthrough to Motor drive, ~45 ft.
-------	**Connector**
F1	Amphenol/Bendix PT08E14-18P(023)
F2	Tyco Electronics/Amp Type 205207-1 (or equiv. D-Sub 25)
F3	Ceramaseal 16802-01-W
F4	Ceramaseal 16812-01-A
F5	3M 10126-3000VE (or equiv.)
Motor Power	**Cable**
CP1	Motor Power to In-glovebox feedthrough, ~8 in.
CP2	In-glovebox feedthrough to Out-glovebox feedthrough, ~3.5 ft.
CP3	Out-glovebox feedthrough to Motor drive, ~45 ft.
-------	**Connector**
P1	Amphenol/Bendix PT08E14-12S(023)
P2	Detoronics DS02H-14S-6P-269
P3	Amphenol/Matrix MS3456LS14S-6S
P4	In house nylon plug
P5	Ceramaseal 18093-06-W
P6	Amphenol 97-3106A18-10S-639

Appendix – Cable and Connector Details

1. Motor Power – Motor to In-Glovebox Feedthrough

Cable length: ?

MS 14S-12S	Wire Color	Wire Size	Wire Function	MS 14S-6P
J	Black #1	18 AWG	Power #1	A
K	Black #2	18 AWG	Power #2	B
L	Black #3	18 AWG	Power #3	C
M	Grn/Yel	14 AWG	Ground	D

Part Description	Part #	# Required	# Spares
Mil-Spec Connector Type 26482- Plug • 90° backshell • Aluminum with electroless nickel plating	Amphenol/Bendix PT08E14-12S(023)[i]	2	0
Mil-Spec Connector Type 5015-Feedthru • Hermetically sealed • Stainless steel with gold plated contacts • In house modification to weld flange	Detoronics DS02H-14S-6P-269[ii]	2	0
Shielded cable • 3 conductors of 18 AWG, 1 of 14 AWG	Unknown	<5ft	?

2. Motor Power – In-Glovebox Feedthru to Out-Glovebox Feedthru

Cable Length: 3½ ft.

MS 14S-6S	Wire Color	Wire Size	Wire Function	MS 18-10P
A	Black #1	14 AWG	Power #1	A
B	Black #2	14 AWG	Power #2	B
C	Black #3	14 AWG	Power #3	C
D	Green	14 AWG	Ground	D

Part Description	Part #	# Required	# Spares
Mil-Spec Connector Type 5015- Plug • Hermetically sealed • Stainless steel with gold plated contacts • Nylon Insulator (in house)	Amphenol/Matrix MS3456LS14S-6S	2	1
Mil-Spec Socket Contact • Crimp type • Gold plated	Military M39029/30-217	8	?
Mil-Spec Backshell Type M85049/11 • Aluminum with gold plating (in house)	Glenair M85049/11-150W	2	2
Connector- Plug • In house construction • Nylon • Uses M3029/30-219 socket contacts	--	2	0
Mil-Spec Socket Contact • Crimp type • Gold plated (in house)	Military M3029/30-219	8	?
Mil-Spec Connector Type 5015-Feedthru • Ceramic insert • Hermetically sealed • Stainless steel with nickel contacts	Ceramaseal 18093-06-W	2	0
Cable • In house construction • 4 Teflon insulated silver-plated stranded copper conductors of	--	~8 ft per conductor	?

14 AWG • Teflon helical bundling wrap			

3. Motor Power – Out-Glovebox Feedthru to Motor Controller

Cable Length: ~45 ft.

MS 18-10S	Wire Color	Wire Size	Wire Function	GV-L3E
A	Black #1	14 AWG	Power #1	U
B	Black #2	14 AWG	Power #2	V
C	Black #3	14 AWG	Power #3	W
D	Green	14 AWG	Ground	Gnd

Part Description	Part #	# Required	# Spares
Mil-Spec Connector Type 5015- Plug • Aluminum with electroless nickel plating • silver plated contacts	Amphenol 97-3106A18-10S-639 or Ceramaseal 18600-02-A	2	0
Shielded cable • 4 conductors of 14 AWG	McMaster-Carr 9936K35	100 ft.	0

4. Motor Feedback – Motor to In-Glovebox Feedthrough

Cable length: ??????

MS 14-18P	Wire Color	Wire Size	Wire Function	D25
A	White	28 AWG	Encoder Ch A+	5
B	Yellow	28 AWG	Encoder Ch A-	6
C	Green	28 AWG	Encoder Ch B+	7
D	Blue	28 AWG	Encoder Ch B-	8
E	Orange	28 AWG	Encoder Index +	9
F	Brown	28 AWG	Encoder Index -	10
G	Black	20 AWG	Encoder Ground	3
H	Red	20 AWG	Encoder +5V	1
K	Wht/Grn	20 AWG	Hall Signal Gnd	11
M	Wht/Blu	20 AWG	Hall Signal +5V	14
P	Wht/Vio	28 AWG	Hall Signal Ch 3	18
T	Wht/Brn	28 AWG	Hall Signal Ch 1	16
U	Wht/Org	28 AWG	Hall Signal Ch 2	17
n/c	Red/Blu	24 AWG	Brake (not used)	n/c
n/c	Red/Blu	24 AWG	Brake (not used)	n/c
L	Yel/Org	28 AWG	Thermal Switch	12
N	Yel/Org	28 AWG	Thermal Switch	13

Part Description	Part #	# Required	# Spares
Mil-Spec Connector Type 26482- Plug • 90° backshell • Aluminum with electroless nickel plating	Amphenol/Bendix PT08E14-18P(023)[iii]	2	0
D-Subminiature Connector- Socket • 25 positions • Crimp snap termination	Tyco Electronics/Amp Series HDP-20 Type 205207-1 (or equivalent)	2	?
Backshell for D-Sub Connector • Nickel plated over plastic	Amphenol Series 17 Type 17-1726-2 (or equivalent)	2	?
Snap In Contact for D-Sub Connector • Socket • Gold flash over phosphor bronze	Tyco Electronics/Amp Series HDP-20 Type 1-66504-0 (or equivalent)	50	?
Mil-Spec Connector D-Subminiature-Feedthru • Ceramic insert • Hermetically sealed • Stainless steel with gold plated contacts	Ceramaseal 16802-01-W	2	0
Shielded Cable • 3 conductors of 18 AWG, 1 of 14 AWG	Unknown	< 5 ft	?

5. Motor Feedback – In-Glovebox Feedthru to Out-Glovebox Feedthru

Cable Length: ?

D25	Wire Color	Wire Size	Wire Function
1	Yellow	24 AWG	Thermal Switch
2	Yellow	24 AWG	Thermal Switch
3	Green	20 AWG	Hall Signal Gnd
4	Brown	24 AWG	Encoder Index -
5	Orange	24 AWG	Encoder Index +
6	Blue	24 AWG	Encoder Ch B-
7	Green	24 AWG	Encoder Ch B+
8	Yellow	24 AWG	Encoder Ch A-
9	White	24 AWG	Encoder Ch A+
11	Black	20 AWG	Encoder Ground
13	Red	20 AWG	Encoder +5V
21	Purple	24 AWG	Hall Signal Ch 3
22	Orange	24 AWG	Hall Signal Ch 2
23	Brown	24 AWG	Hall Signal Ch 1
25	Blue	20 AWG	Hall Signal +5V

Part Description	Part #	# Required	# Spares
Mil-Spec Connector D-Subminiature - Socket • PEEK housing	Ceramaseal 16812-01-A	4	0
Socket Contact for D-Sub Connector • Gold plated	Ceramaseal 16757-02-A	60	?
Cable • In house construction • 10 Teflon insulated silver-plated stranded copper conductors of 24 AWG, 4 of 20 AWG • Teflon helical bundling wrap	--	~8 ft per conductor	?
Mil-Spec Connector D-Subminiature-Feedthru • Ceramic insert • Hermetically sealed • Stainless steel with gold plated contacts	Ceramaseal 16802-01-W	2	0

6. Motor Feedback – Out-Glovebox Feedthru To Motor Controller

Cable Length: ~45 ft.

D25	Wire Color	Wire Size	Wire Function	Amp Champ
5	White	22 AWG	Encoder Ch A+	5
6	Yellow	22 AWG	Encoder Ch A-	6
7	Green	22 AWG	Encoder Ch B+	7
8	Blue	22 AWG	Encoder Ch B-	8
9	Orange	22 AWG	Encoder Index +	9
10	Brown	22 AWG	Encoder Index -	10
3	Black	22 AWG	Encoder Ground	3,4
1	Red	22 AWG	Encoder +5V	1,2
11	Wht/Blk	22 AWG	Hall Signal Gnd	11
14	Wht/Red	22 AWG	Hall Signal +5V	14
16	Wht/Brn	22 AWG	Hall Signal Ch 3	16
18	Violet	22 AWG	Hall Signal Ch 1	18
17	Wht/Org	22 AWG	Hall Signal Ch 2	17
12	Wht/Yel	22 AWG	Thermal Switch	12
13	Grey	22 AWG	Thermal Switch	13

Part Description	Part #	# Required	# Spares
D-Subminiature Connector- Socket • 25 positions • Crimp snap termination	Amphenol Series 17RR Type 177-RR-B25S (or equivalent)	2	?
Snap In Contact for D-Sub Connector • Socket • Gold flash	Amphenol Series 17RR Type 17-RRD1-F01-100 (or equivalent)	50	?
Backshell for D-Sub Connector • Zinc die-cast	Amphenol Series 17 Type 17-1657-25 (or equivalent)	2	?
Unshielded Cable • 15 conductors of 22 AWG	Alpha Cable 5010/15C-100 (or equivalent)	100 ft.	0

D-Subminiature Connector – Plug • 26 positions • Nickel-plated steel shell material • Nickel contact finish • Solder cup termination	3M 10126-3000VE	2	?
Backshell for D-Sub Connector • Screw lock	?	2	0

7. Pulley Encoder – Encoder To In-Glovebox Feed

Cable Length: ~6 in.

Molex	Wire Color	Wire Size	Wire Function	D15
1	Black	22 AWG	Gnd	1
3	Blue	22 AWG	Encoder Ch A	3
4	Red	22 AWG	+5 VDC	4
5	Yellow	22 AWG	Encoder Ch B	5

Part Description	Part #	# Required	# Spares
Connector - Receptacle • Single row mini latch housing • 5 contacts	Framatome Connectors 65039-032 (or equivalent)	2	?
Socket Contacts • Gold plated	Framatome Connectors 48251-000 (or equivalent)	8	?
Cable • In house construction • 4 Teflon insulated silver-plated stranded copper conductors of 22 AWG	--	>1 ft of each	?
D-Subminiature Connector- Socket • 15 positions • Crimp snap termination	Tyco Electronics/Amp Series HDP-20 Type 205205-1 (or equivalent)	2	?
Snap In Contact for D-Sub Connector • Socket • Gold flash over phosphor bronze	Tyco Electronics/Amp Series HDP-20 Type 1-66504-0 (or equivalent)	8	?

8. Pulley Encoder – In-Glovebox Feed to Out-Glovebox Feed

Cable Length: ~4 ft.

D15	Wire Color	Wire Size	Wire Function
4	Yellow	20 AWG	Encoder Ch B
5	Red	20 AWG	+5 VDC
6	Blue	20 AWG	Encoder Ch A
8	Black	20 AWG	Gnd

Part Description	Part #	# Required	# Spares
Mil-Spec Connector D-Subminiature – Socket • 15 positions • PEEK housing	Ceramaseal 16811-01-A	4	0
Socket Contact for D-Sub Connector • Gold plated	Ceramaseal 16757-02-A	16	?
Cable • In house construction • 4 Teflon insulated silver-plated stranded copper conductors of 20 AWG • Teflon helical bundling wrap	--	~8 ft per conductor	?
Mil-Spec Connector D-Subminiature-Feedthru • Ceramic insert • Hermetically sealed • Stainless steel with gold plated contacts	Ceramaseal 16801-01-W	2	0

9. Pulley Encoder – Out-Glovebox Feed to Readout

Cable Length: ~50 ft.

D15	Wire Color	Wire Size	Wire Function	RJ-11
1	Yellow	28 AWG	Gnd	2
3	Green	28 AWG	Encoder Ch A	3
4	Red	28 AWG	+5 VDC	4
5	Black	28 AWG	Encoder Ch B	5

Part Description	Part #	# Required	# Spares
D-Subminiature Connector- Socket • 15 positions • Crimp snap termination	Amphenol Series 17RR Type 177-RR-A15S (or equivalent)	2	?
Snap In Contact for D-Sub Connector • Socket • Gold flash	Amphenol Series 17RR Type 17-RRD1-F01-100 (or equivalent)	8	?
Backshell for D-Sub Connector • Zinc die-cast	Amphenol Series 17 Type 17-1657-15 (or equivalent)	2	?
Telecom Cord • 4 conductors of 28 AWG	McMaster-Carr 5703T33 (or equivalent)	100 ft.	0
RJ-11 Plug	McMaster-Carr 5681T28 (or equivalent)	2	?

10. Operator Interface (RP240) – Interface to Motor Controller

Cable Length: ~50 ft.

D9	Wire Color	Wire Size	Wire Function
2	Blue	24 AWG	Rx
3	Yellow	24 AWG	Tx
5	Black	24 AWG	Gnd
9	Red	24 AWG	+5 VDC

Part Description	Part #	# Required	# Spares
D-Subminiature Connector- Socket • 9 positions • Crimp snap termination	Amphenol Series 17RR Type 177-RR-E9S (or equivalent)	1	?
Snap In Contact for D-Sub Connector • Socket • Gold flash	Amphenol Series 17RR Type 17-RRD1-F01-100 (or equivalent)	4	?
Backshell for D-Sub Connector • Zinc die-cast	Amphenol Series 17 Type 17-1657-09 (or equivalent)	1	?
Computer Cable • Foil and braid shielded • 10 conductors of 24 AWG	McMaster-Carr 75985K65 (or equivalent)	100 ft.	0

11. Slip Ring – Slip Ring to In-Glovebox Feedthrough

Cable length: ?

Unknown Conn	Wire Color	Wire Size	Wire Function	D9 Pin
	Black (#1)	28 AWG		1
	Brown (#2)	28 AWG		2
	Red (#3)	28 AWG		3
	Orange (#4)	28 AWG		4
	Yellow (#5)	28 AWG		5
	Green (#6)	28 AWG		6

References and Vendors

http://www.amphenol-aerospace.com
http://www.detoronics.com, May be a special order part.
http://www.detoronics.com, May be a special order part.
http://www.amphenol-aerospace.com