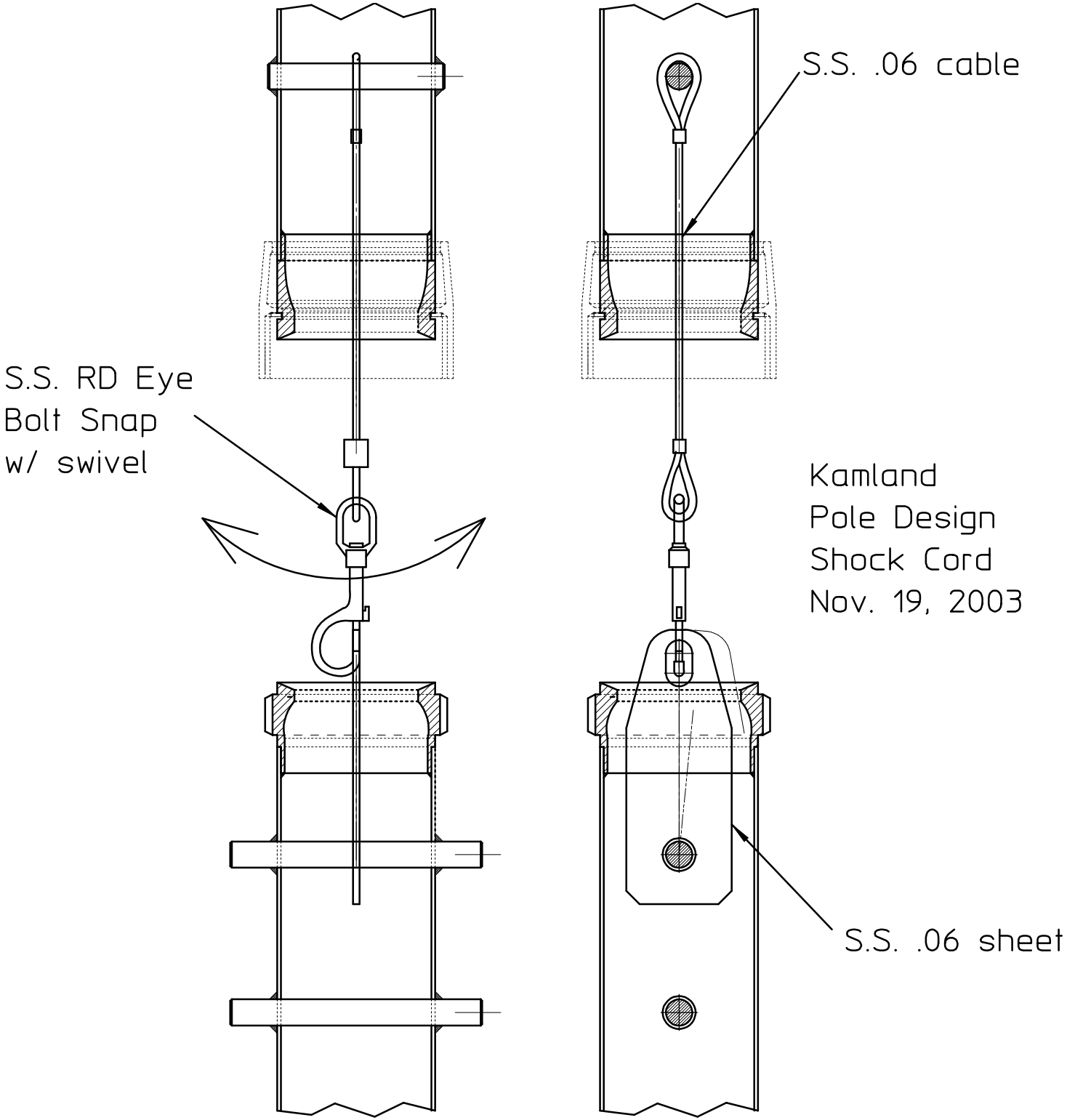
S.S. .06 cable
S.S. RD Eye
Bolt Snap
w/ swivel
Kamland
Pole Design
Shock Cord
Nov. 19, 2003
S.S. .06 sheet