00X0002A	REQD	ITEM	PART NUMBER	DESCRIPTION
	A/R			ANGLE, 4"X 4"X 3/8 WEB, 6061-T6 ALUM. ALLOY

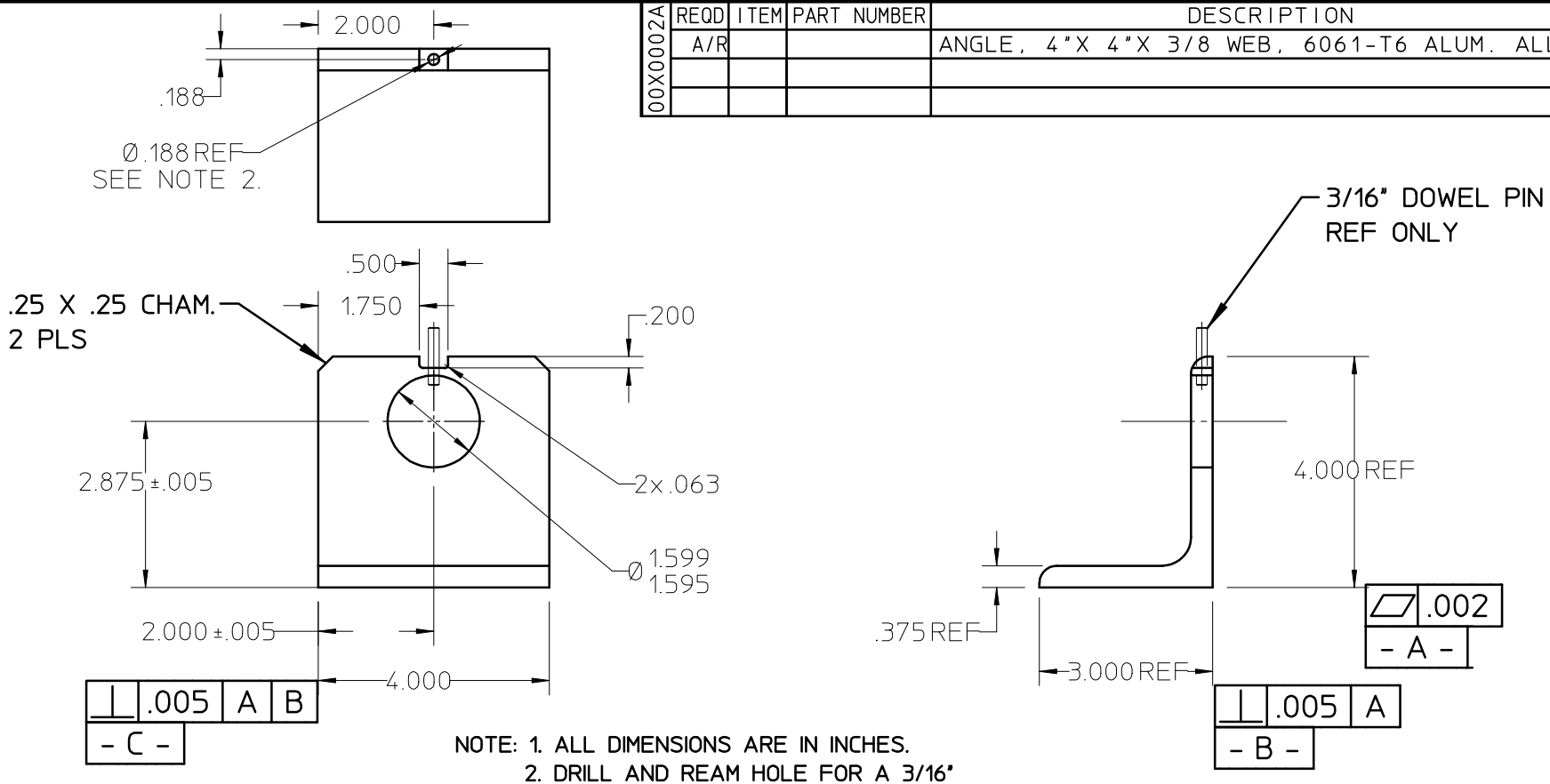

NOTE: 1. ALL DIMENSIONS ARE IN INCHES.
2. DRILL AND REAM HOLE FOR A 3/16" DIAMETER DOWEL PIN - MACHINE FOR A SLIDING FIT.

REV	DWN	CHK	DATE	DESCRIPTION

UNLESS OTHERWISE SPECIFIED
TOLERANCE .X ±.1 .XX ± .03 .XXX ±.015
SURFACE FINISH 125 √

1. SAWED, FLAMECUT, SHEARED OR CUT STOCK FINISH.
2. THREADS CLASS 2
3. CHAMFER ENDS OF ALL SCREW THRDS 30°.
4. 1 1/2 PITCH RELIEF WITH ROUND NOSE TOOL ON ALL MACHINE CUT THRDS.
5. BREAK EDGES 1/64 MAX. ON MACHINE WORK.
6. REMOVE BURRS, LOOSE SCALE AND WELD SPLATTER.
7. REF.-USASI OR ASA STDS SECT Y-14 & B46-1.

SHOP ORDERS

ACCT NO	SER NO	
DATE ISSD	DATE REQD	NO REQD
DELIVER TO		
SURFACE TREATMENT	DEGREASE	
IDENTIFIC METHOD	TAG	
DWG BY	Y. MINAMIHARA	DATE 10-01-03
CHK BY		DATE

LAWRENCE BERKELEY LABORATORY
UNIVERSITY OF CALIFORNIA-BERKELEY

KAMLAND
4 PI CALIBRATION SYSTEM
TUBE ALIGNMENT FIXTURE

PAT CLEAR	DWG TYPE	SHOWN ON	SCALE: HALF
	DETAIL	00X0000	DO NOT SCALE PRINTS
MICROFILMED	DESIGN ACCT NO	CATEGORY CODE	DWG NO 00X0002A REV