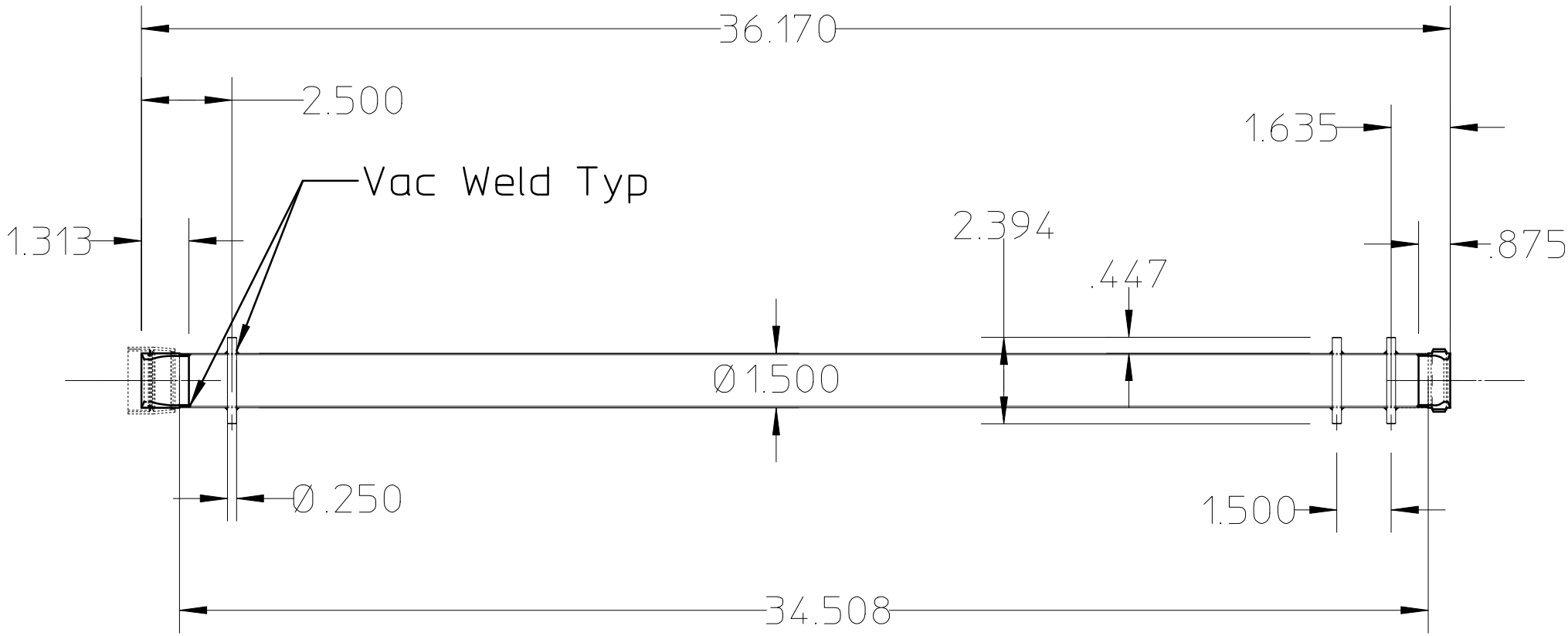Titanium Tube & Fittings