REQ	ITEM	PART NUMBER	DESCRIPTION
			304 STAINLESS STEEL

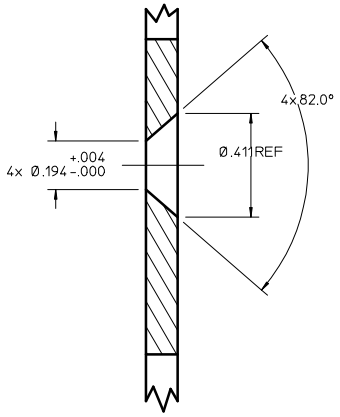

DETAIL A
SCALE: 4X

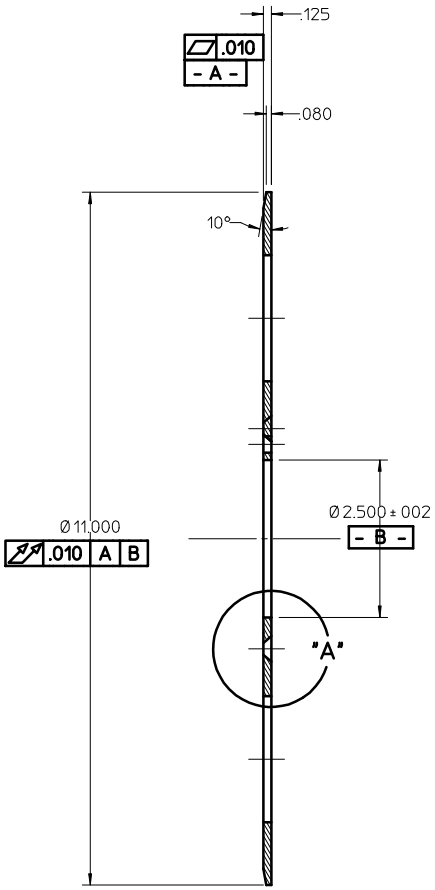

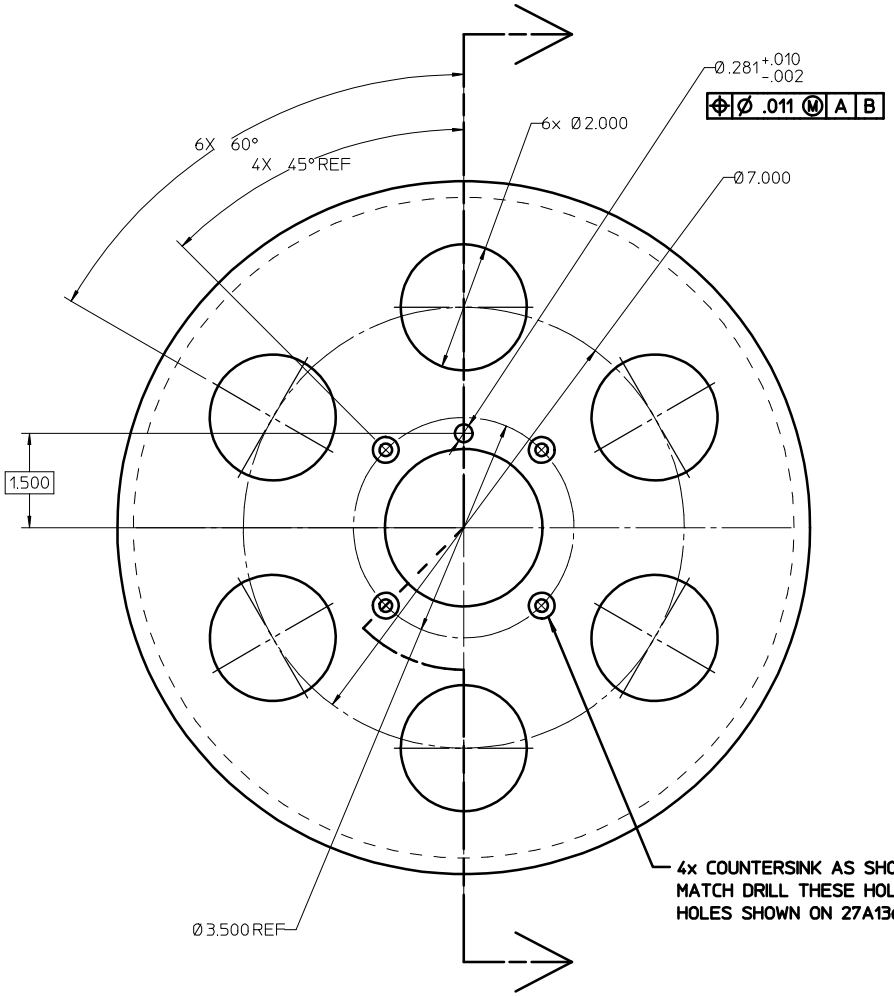

27A1384

NOTES:
1. ALL DIMENSIONS ARE IN INCHES.
2. UNLESS OTHERWISE SPECIFIED, CHAMFER ALL CORNERS .020 X 45 DEG.

REV	DWG	CHK	ZONE	DATE	CHANGES

UNLESS OTHERWISE SPECIFIED
TOLERANCES: .X ± 1 — FRAC. ±1/64; .XX ± .030 — ANGLES ± .2°; .XXX ± .015 — FINISH 63 √
THREADS ARE CLASS 2
CHAMFER ENDS OF ALL SCREW THREADS 30°.
CUT 1.5 PITCH THRU RELIEF WITH ROUND NOSE TOOL ON MACHINE CUT THREADS.
BREAK EDGES .016 MAX. ON MACHINED WORK
REMOVE BURRS WELD SPLATTER & LOOSE SCALE
REFERENCES: ANSI Y14.5 & B46.1.

SHOP ORDERS
ACCT. NO. | SERIAL NO.
DATE ISSD | DATE REQD. | IND. REQD.
DELIVER TO
SURFACE TREATMENT: DEGREASE
IDENT METH.: TAG
DWG BY: Y. MINAMIHARA — DATE: 02-09-04
CHK. BY | DATE

LAWRENCE BERKELEY LABORATORY
UNIVERSITY OF CALIFORNIA-BERKELEY
KAMLAND
4 PI CALBRATION SYSTEM
SPOOL SIDE PLATE - RIGHT HAND

PATENT CLEAR	DWG. TYPE	SHOWN ON	SCALE	DO NOT SCALE PRINTS
	DETAIL		FULL	
MICROFILMED	DESIGN ACCT NO	CATEGORY CODE	DWG. NO	SIZE / REV.
		KA0001	27A1384	