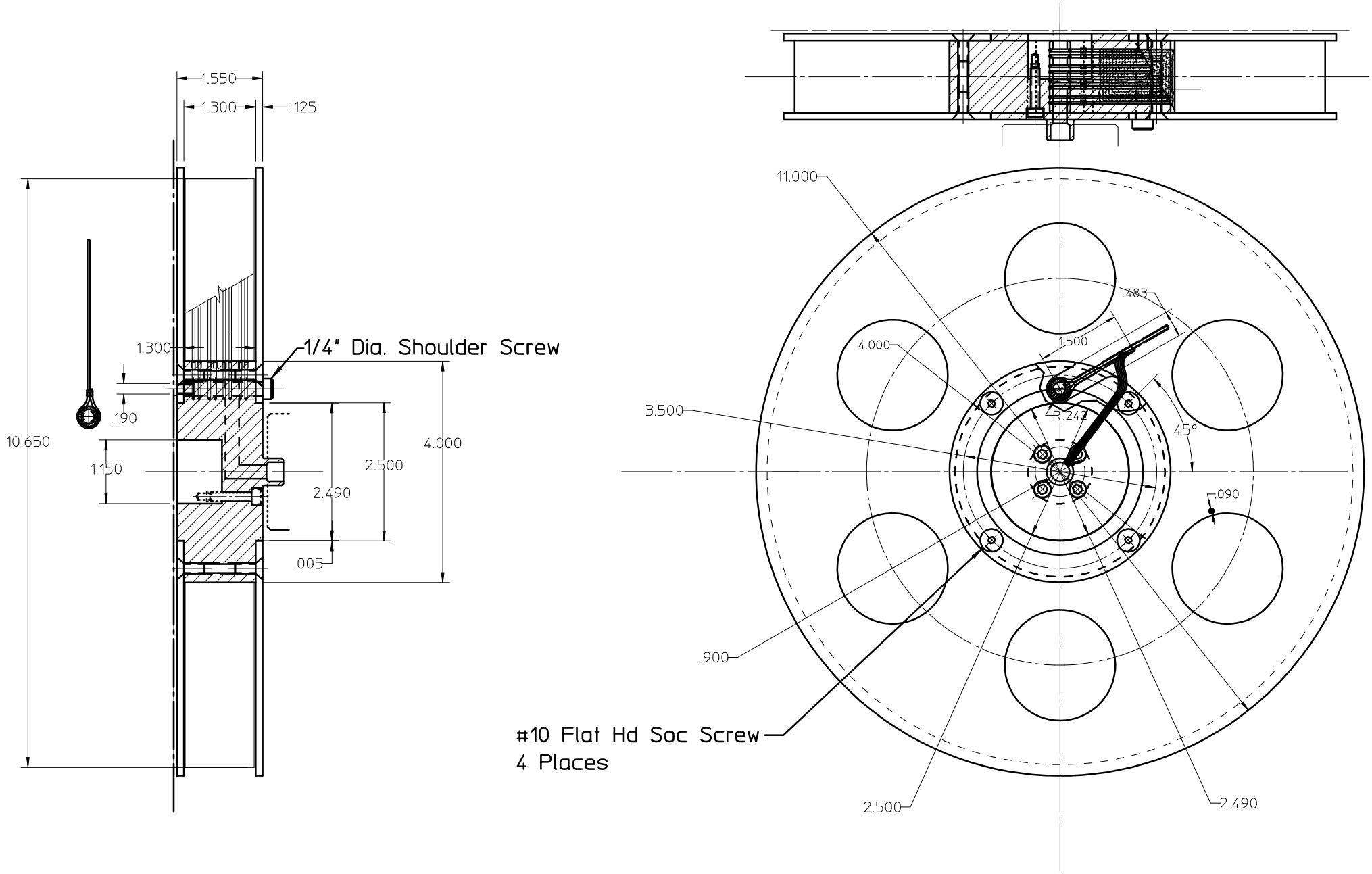
1.550
1.300
.125
1.300
1/4" Dia. Shoulder Screw
.190
10.650
1.150
2.490
2.500
4.000
.005
11.000
.483
1.500
4.000
3.500
R.242
45°
.090
.900
#10 Flat Hd Soc Screw
4 Places
2.500
2.490