REQ	ITEM	PART NUMBER	DESCRIPTION
			PLATE, 304 STAINLESS STEEL

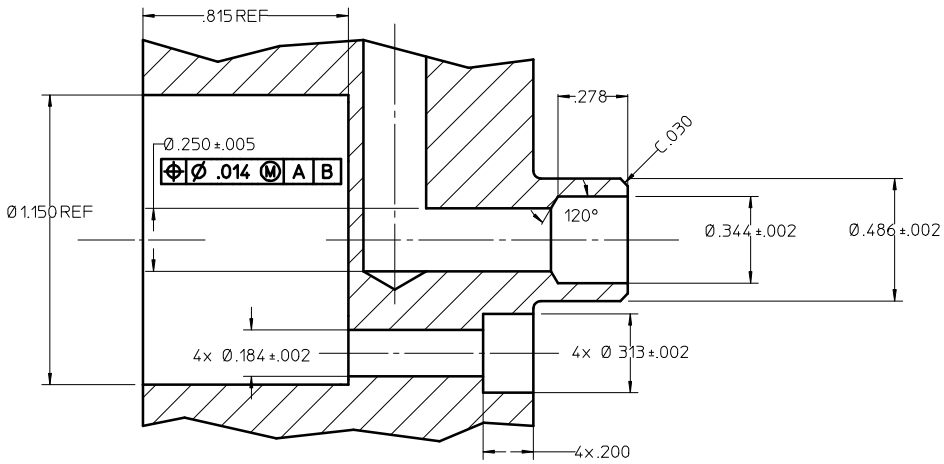

DETAIL A
SCALE:4X

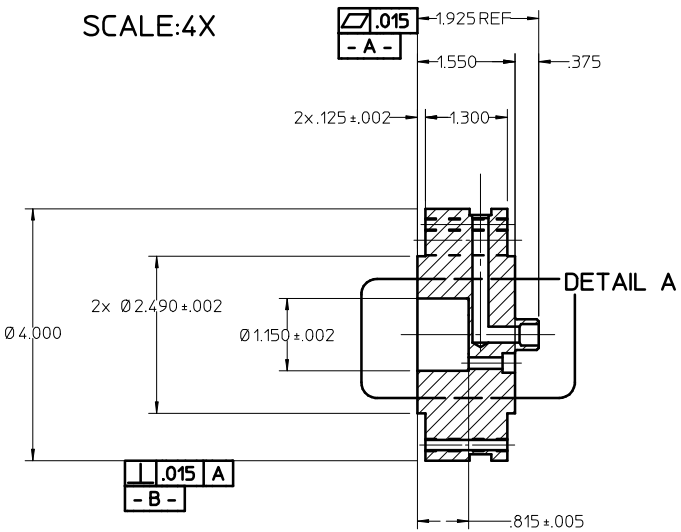

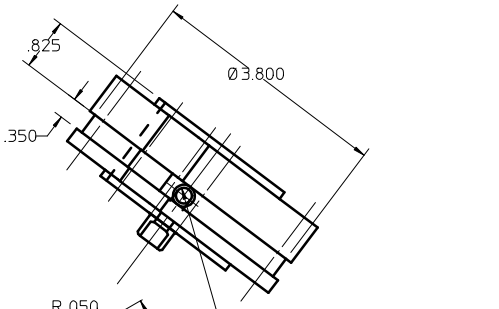

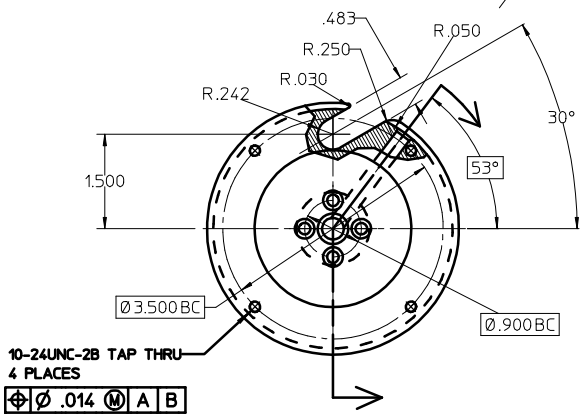

NOTE: 1. ALL DIMENSIONS ARE IN INCHES.

REV	DWG	CHK	ZONE	DATE	CHANGES

UNLESS OTHERWISE SPECIFIED

TOLERANCES		
.X ± 1	FRAC. ±1/64	
.XX ± .030	ANGLES ± 1°	
.XXX ± .010	FINISH 63 √	

THREADS ARE CLASS 2
CHAMFER ENDS OF ALL SCREW THREADS 30°
CUT 1.5 PITCH THRU RELIEF WITH ROUND NOSE TOOL ON MACHINE CUT THREADS.
BREAK EDGES .016 MAX. ON MACHINED WORK
REMOVE BURRS WELD SPLATTER & LOOSE SCALE
REFERENCES: ANSI Y14.5 & B46.1.

SHOP ORDERS

ACCT. NO.		SERIAL NO.	
DATE ISSD.	DATE REQD.	IND. REQD.	
DELIVER TO			
SURFACE TREATMENT	DEGREASE		
IDENT METH.	TAG		
DWG BY	Y. MINAMIHARA	DATE	02-09-04
CHK. BY		DATE	

LAWRENCE BERKELEY LABORATORY
UNIVERSITY OF CALIFORNIA-BERKELEY

KAMLAND

4 PI CALBRATION SYSTEM

SPOOL CORE

PATENT CLEAR	DWG. TYPE	SHOWN ON	SCALE	DO NOT SCALE PRINTS
	DETAIL		FULL	
MICROFILMED	DESIGN ACCT NO	CATEGORY CODE	DWG. NO	SIZE / REV.
		KA0001		