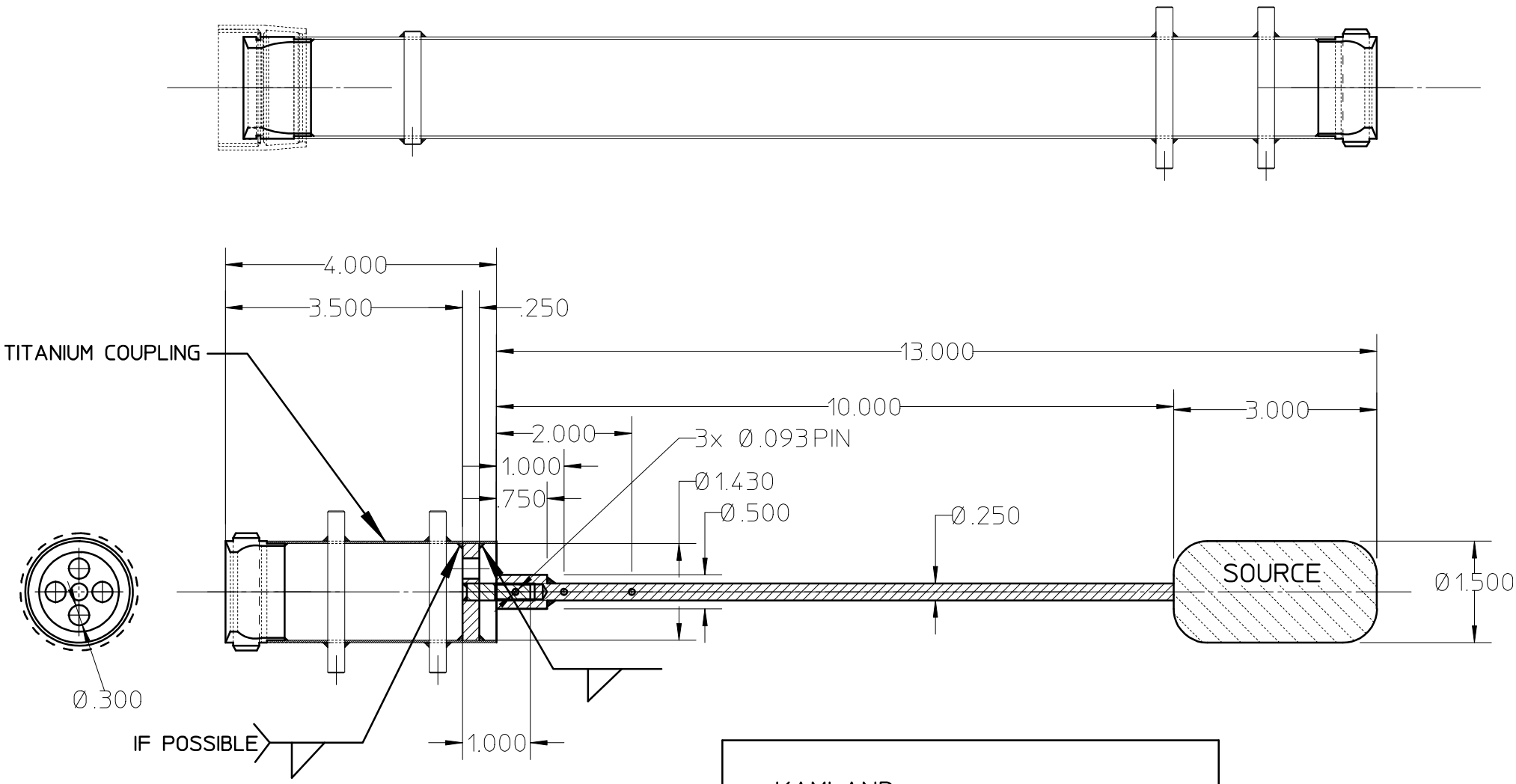

KAMLAND
CALIBRATION SOURCE LAYOUT
OCT. 13, 2003 MINAMIHARA