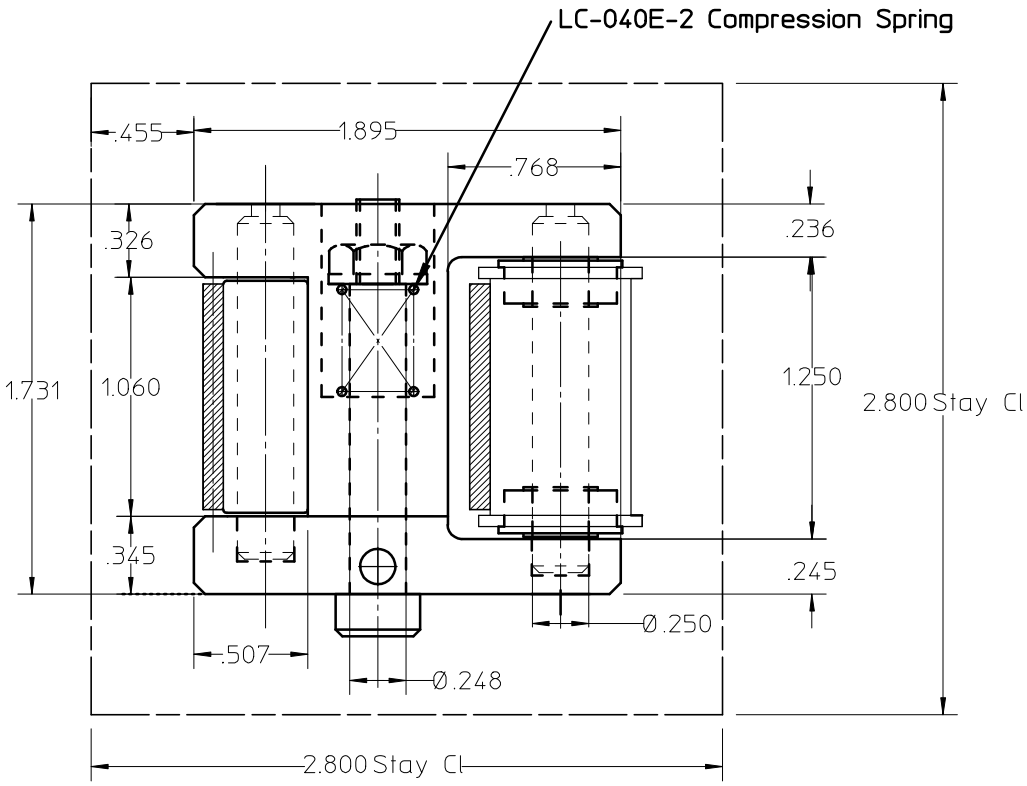

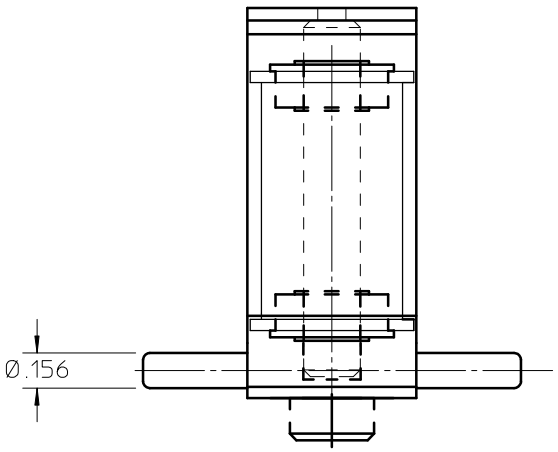

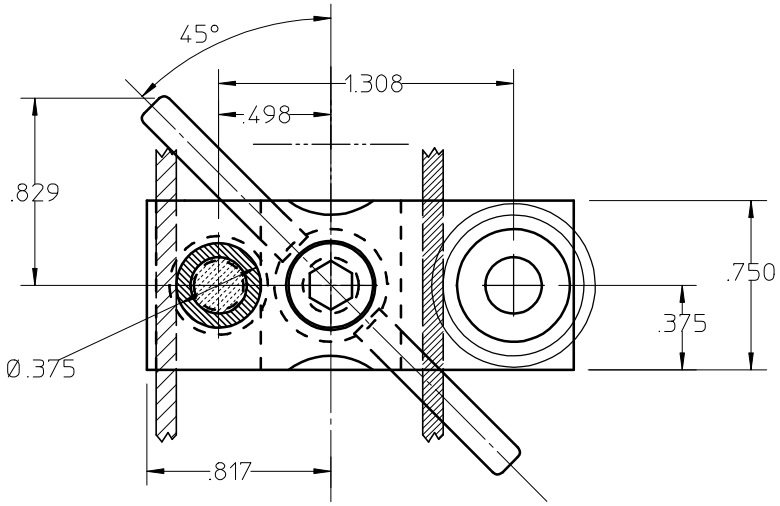

KAMLAND
4 PI CALIBRATION SYSTEM
PIVOT BLOCK LAYOUT
JANUARY 23, 2004