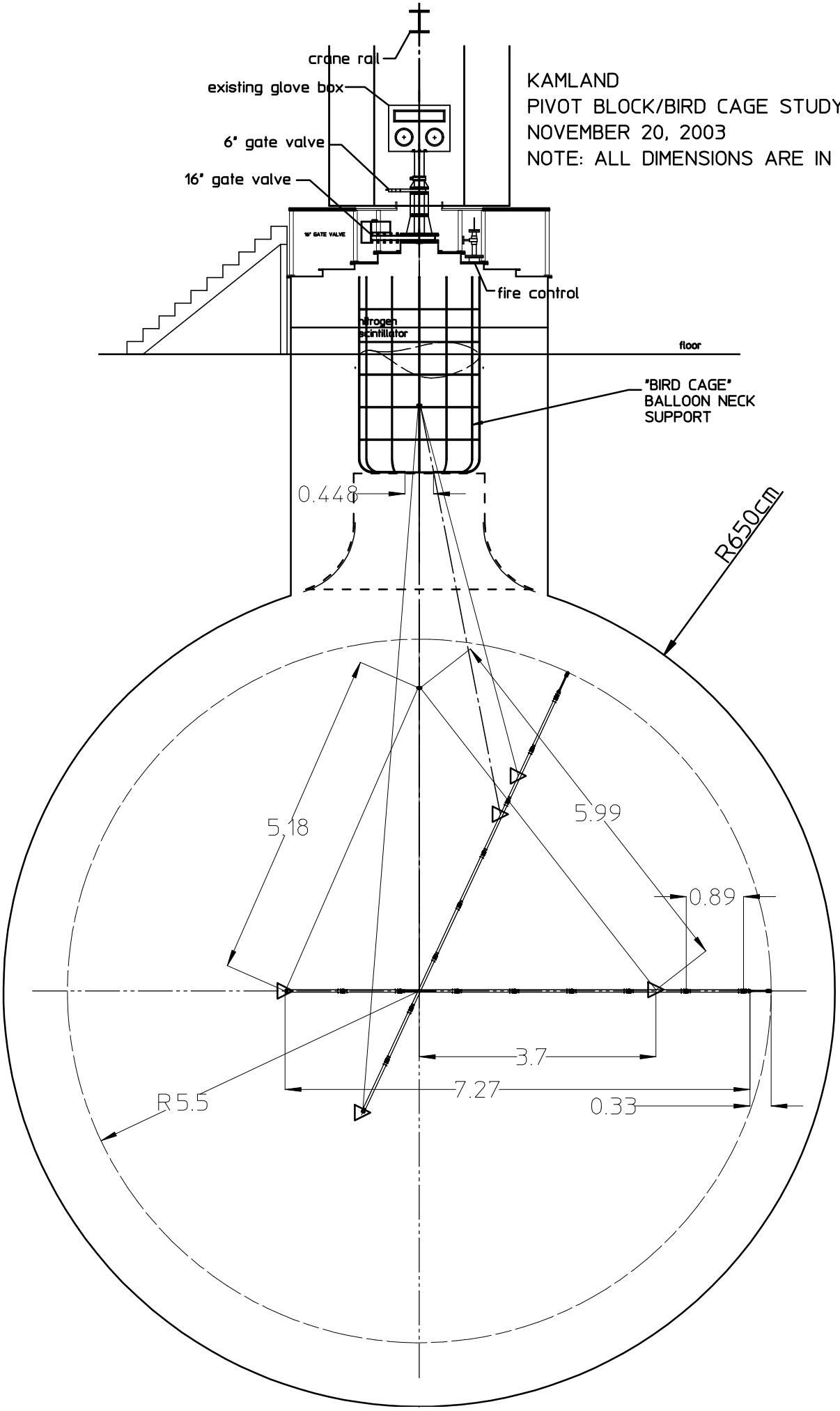

KAMLAND
PIVOT BLOCK/BIRD CAGE STUDY
NOVEMBER 20, 2003
NOTE: ALL DIMENSIONS ARE IN METERS.