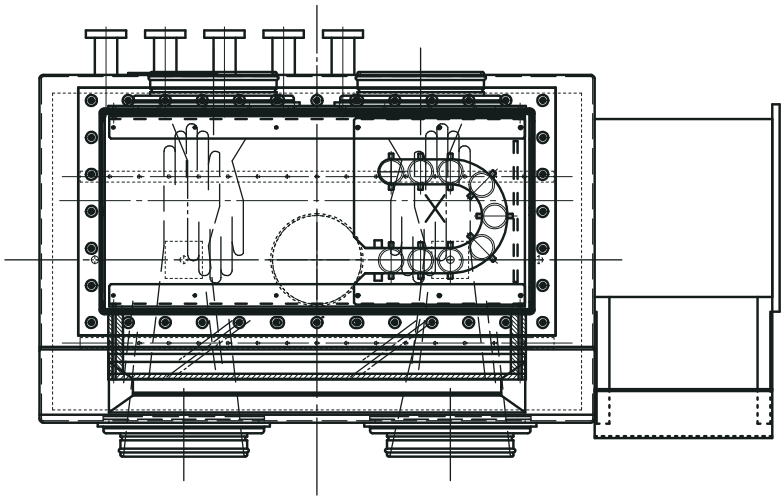

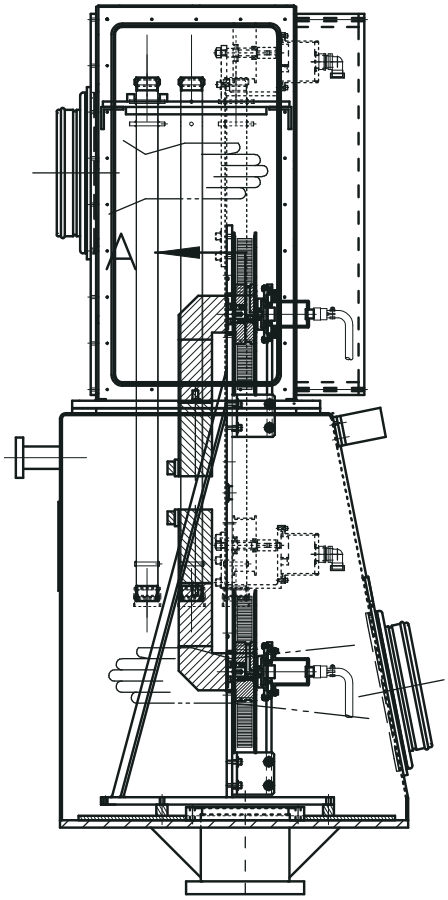
A

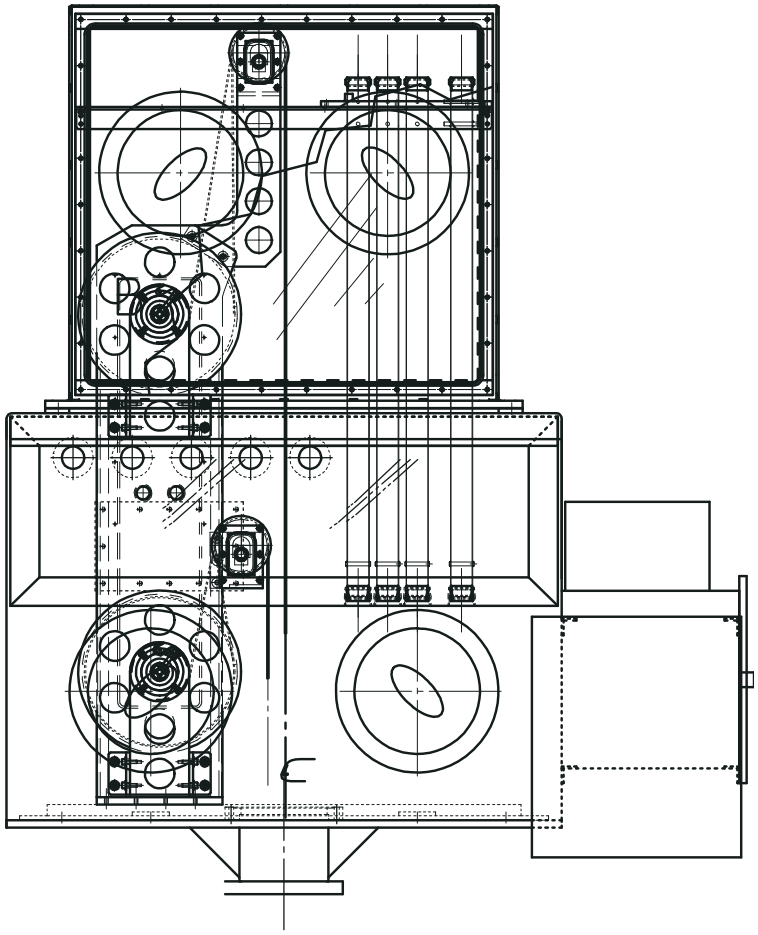
E

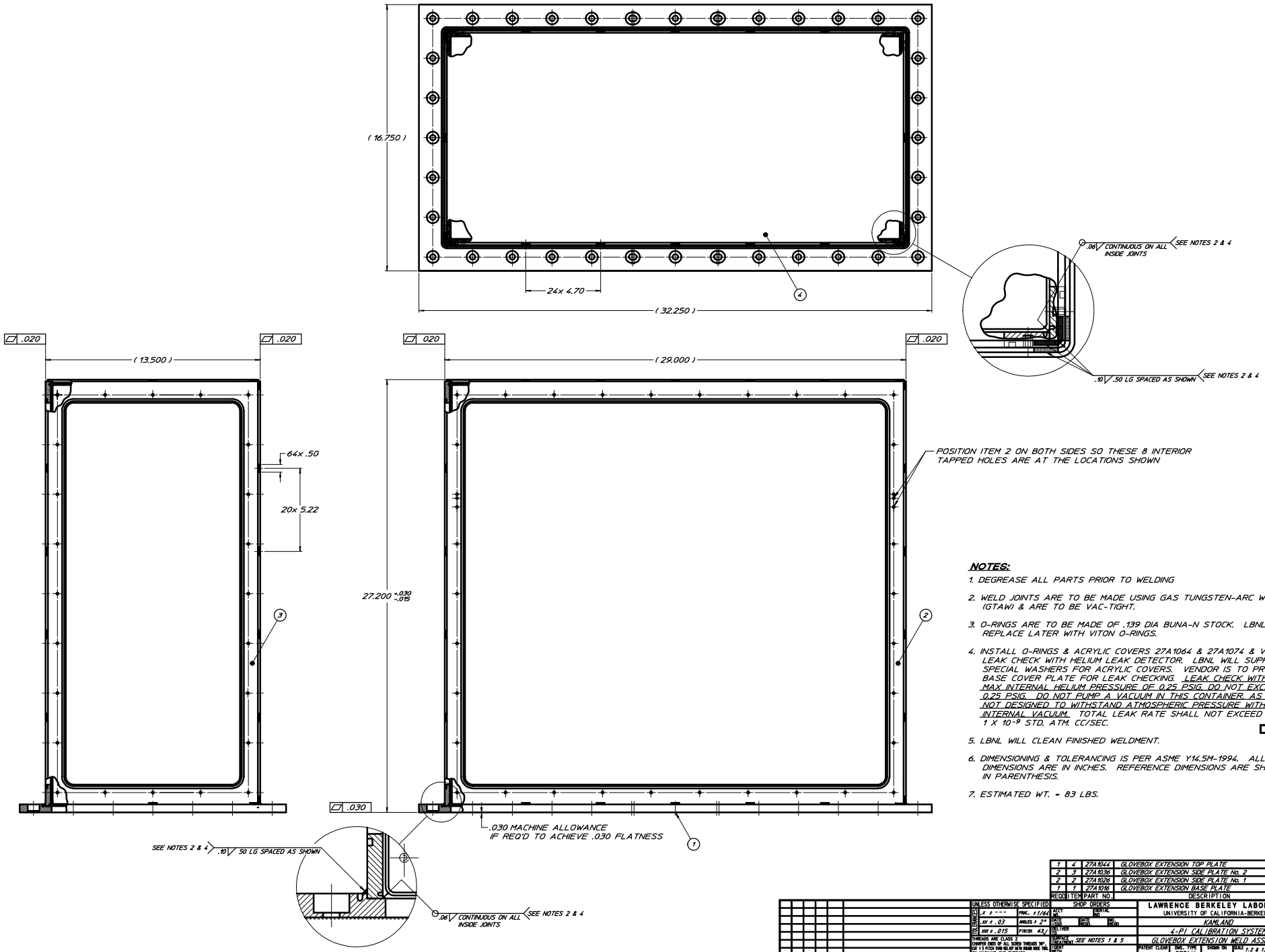

NOTES:

1. DEGREASE ALL PARTS PRIOR TO WELDING
2. WELD JOINTS ARE TO BE MADE USING GAS TUNGSTEN-ARC WELDING (GTAW) & ARE TO BE VAC-TIGHT.
3. O-RINGS ARE TO BE MADE OF .139 DIA BUNA-N STOCK. LBNL WILL REPLACE LATER WITH VITON O-RINGS.
4. INSTALL O-RINGS & ACRYLIC COVERS 27A1064 & 27A1074 & VACUUM LEAK CHECK WITH HELIUM LEAK DETECTOR. LBNL WILL SUPPLY SPECIAL WASHERS FOR ACRYLIC COVERS. VENDOR IS TO PROVIDE BASE COVER PLATE FOR LEAK CHECKING. LEAK CHECK WITH A MAX INTERNAL HELIUM PRESSURE OF 0.25 PSIG. DO NOT EXCEED 0.25 PSIG. DO NOT PUMP A VACUUM IN THIS CONTAINER, AS IT IS NOT DESIGNED TO WITHSTAND ATMOSPHERIC PRESSURE WITH AN INTERNAL VACUUM. TOTAL LEAK RATE SHALL NOT EXCEED 1×10^{-9} STD. ATM. CC/SEC.
5. LBNL WILL CLEAN FINISHED WELDMENT.
6. DIMENSIONING & TOLERANCING IS PER ASME Y14.5M-1994. ALL DIMENSIONS ARE IN INCHES. REFERENCE DIMENSIONS ARE SHOWN IN PARENTHESIS.
7. ESTIMATED WT. = 83 LBS.

27A1056

REQD	ITEM	PART NO.	DESCRIPTION
1	4	27A1044	GLOVEBOX EXTENSION TOP PLATE
2	3	27A1036	GLOVEBOX EXTENSION SIDE PLATE No. 2
2	2	27A1026	GLOVEBOX EXTENSION SIDE PLATE No. 1
1	1	27A1016	GLOVEBOX EXTENSION BASE PLATE

REV	DWG	CHK	ZONE	DATE	CHANGES

UNLESS OTHERWISE SPECIFIED
TOLERANCES: .X ± --- FRAC. ±1/64; .XX ± .03 ANGLES ± 2°; .XXX ± .015 FINISH 63
THREADS ARE CLASS 2
CHAMFER ENDS OF ALL SCREW THREADS 30°.
CUT 1.5 FITCH THIN RELIEF WITH RUBBER BOSE TOOL ON MACHINE CUT THREADS.
BREAK EDGES .016 MAX. ON MACHINED WORK
REMOVE BURRS WELD SPLATTER & LOOSE SCALE
REFERENCES: ANSI Y14.5 & B46.1.

SHOP ORDERS
ACCT NO. / SERIAL NO.
DATE ISSUED / DATE REQD. / NO. REQD
DELIVER TO
SURFACE TREATMENT SEE NOTES 1 & 5
CHECK BY: S.R. ABBOTT DATE 10-20-03
CHK BY: K. HEEGER DATE 10-20-03

LAWRENCE BERKELEY LABORATORY
UNIVERSITY OF CALIFORNIA-BERKELEY
KAMLAND
4-PI CALIBRATION SYSTEM
GLOVEBOX EXTENSION WELD ASSEMBLY

PATENT CLEAR | DWG. TYPE DETAIL | SHOWN ON | SCALE 1.2 & 1.5:1 | DO NOT SCALE DRAWING
INTERPRETED | DESIGN ACCT NO. | CATEGORY CODE KA0001 | DWG. NO. 27A1056 | SIZE | REV.

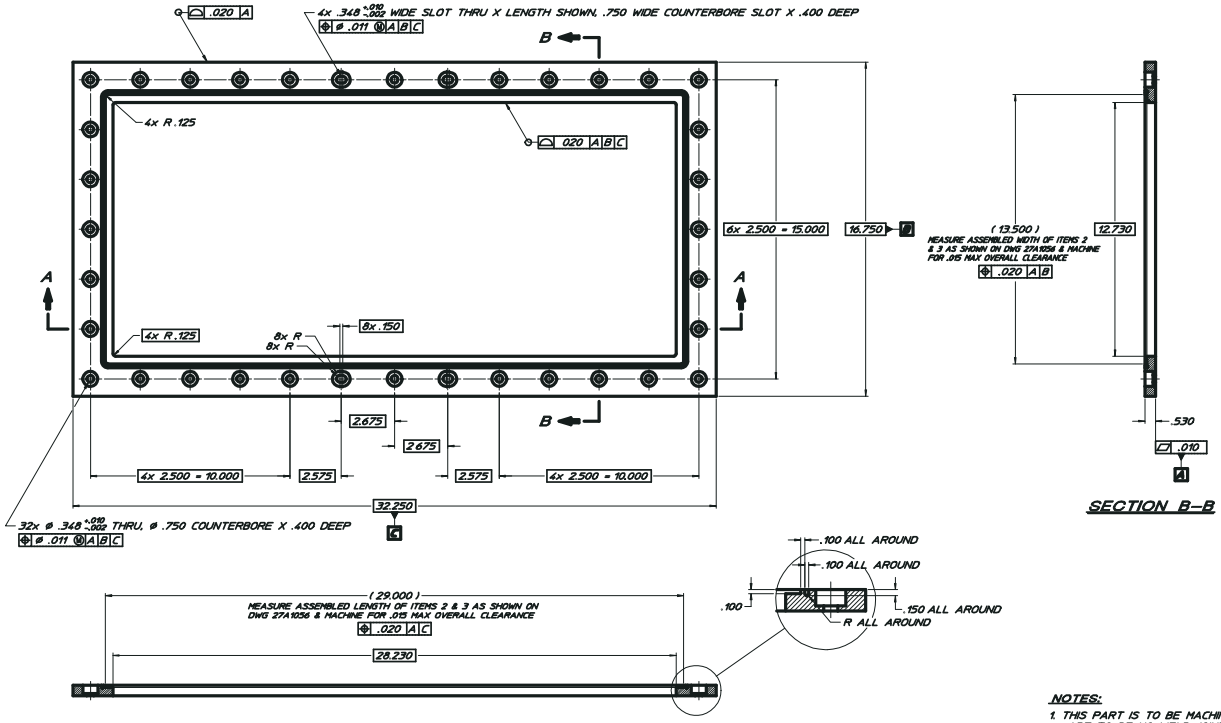

NOTES:

27A1016A

1. THIS PART IS TO BE MACHINED FROM A SINGLE PLATE. THERE ARE TO BE NO WELD JOINTS. ALL SURFACES ARE TO BE MACHINED OR GROUND. STOCK OR SAW-CUT SURFACES ARE NOT ACCEPTABLE.
2. UNLESS OTHERWISE SPECIFIED, ALL INSIDE CORNER RADII ARE .010 MAX & CHAMFER ALL EDGES .020 X 45°.
3. DIMENSIONING & TOLERANCING IS PER ASME Y14.5M-1994. ALL DIMENSIONS ARE IN INCHES. REFERENCE DIMENSIONS ARE SHOWN IN PARENTHESIS.
4. ESTIMATED WT = 22 LBS.

		PLATE 304 S.S.	
		SECTION PART NO	DESCRIPTION
		SHOP DRAWING	LAWRENCE BERKELEY LABORATORY
			UNIVERSITY OF CALIFORNIA-BERKELEY
			KAMLAND
			L-PI CALIBRATION SYSTEM
			GLOVEPORT EXTENSION BASE PLATE
A	SPAC 001	7-24 DELETED WELD PREP GROOVE ON SECTION B-B	
REVISION	CHECKED	DATE	CHANGES

UNLESS OTHERWISE SPECIFIED
X ± ---- FRAC ± 1/64
XX ± .03 ANGLES ± 2°
XXX ± .015 FRACTIONS ± 1/32
TOLERANCE AND FINISH
DIMENSIONS NOTED AT ALL BOLTED HOLES TAP THE FIXED THRU OR BLIND BOTH HOLES THRU NON MACHINE CUT THREADS
BREAK EDGES .010 MAX, ON MACHINED EDGES
BREAK EDGES .010 MAX, ON ALL EDGES
COMPONENTS, ITEMS 1 & 2 & 3 & 4

DRAWN: L. DEGRAUSE
CHECK: TAE
APPROVED: S.B. ABBOTT
APPROVED: E. HEEGER

DATE: 06-4-2
DATE: 06-4-2

WEIGHT LIBRARY | WEIGHT TOTAL | DETAIL | WEIGHT FILE

DRAWING NO: 27A1016 | SHEET 1 OF 1 | REV A

ITEMS 1 & 1A

KA00021

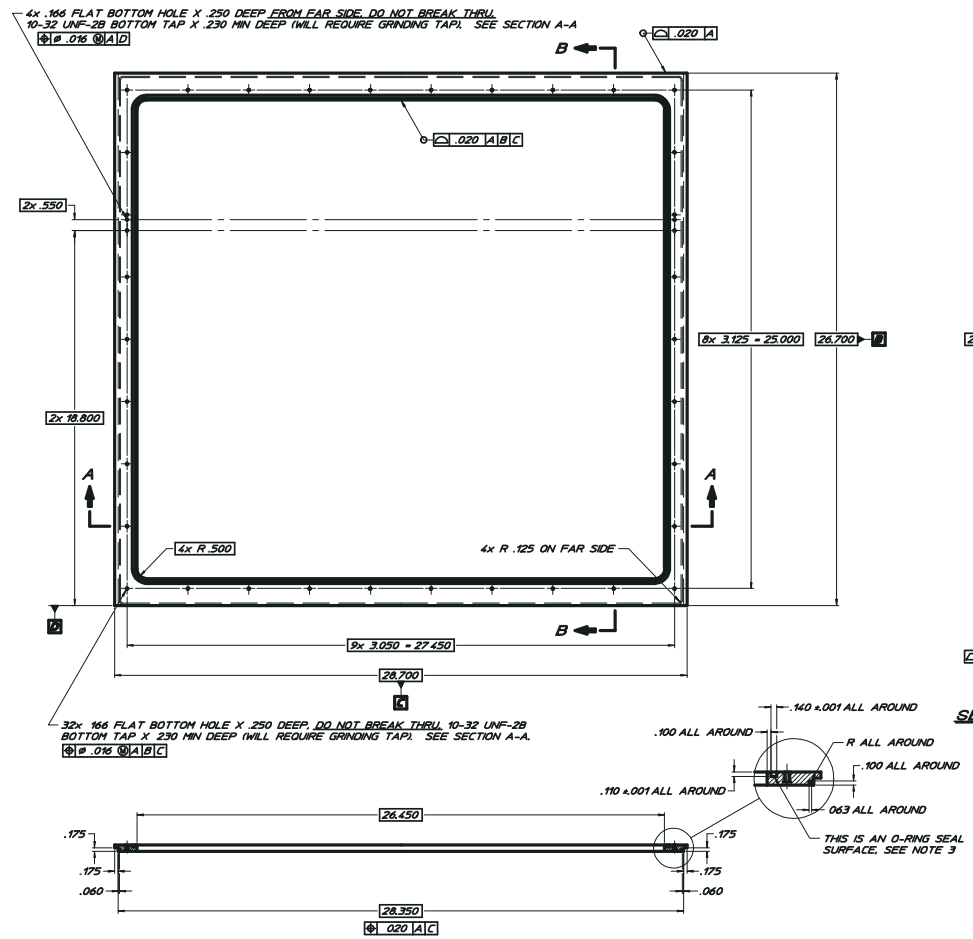

SECTION A-A

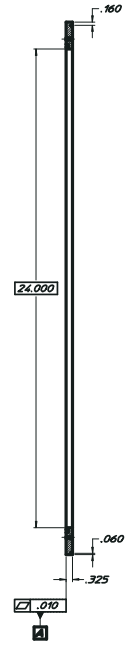

SECTION B-B

NOTES:

1. THIS PART IS TO BE MACHINED FROM A SINGLE PLATE. THERE ARE TO BE NO WELD JOINTS. ALL SURFACES ARE TO BE MACHINED OR GROUND. STOCK OR SAW-CUT SURFACES ARE NOT ACCEPTABLE. 27A1026
2. UNLESS OTHERWISE SPECIFIED, ALL INSIDE CORNER RADII ARE .010 MAX & CHAMFER ALL EDGES .020 X 45°.
3. THERE ARE TO BE NO TRANSVERSE SCRATCHES OR TOOL MARKS ON THE BOTTOM SURFACE OF THE O-RING GROOVE
4. DIMENSIONING & TOLERANCING IS PER ASME Y14.5M-1994. ALL DIMENSIONS ARE IN INCHES. REFERENCE DIMENSIONS ARE SHOWN IN PARENTHESIS.
5. ESTIMATED WT = 12 LBS.

REQ'D	ITEM	PART NO	DESCRIPTION
			PLATE, 304 S.S.

UNLESS OTHERWISE SPECIFIED	SHOP MARKS
ACT.	
DATE	
DRAWN	
CHECKED	
APPROVED	
MATERIAL	
FINISH	
DEBURR AND BREAK SHARP EDGES	
REMOVE BURRS AT ALL SURFACE INTERSECTIONS. DO NOT CLEANSHOT THE BLIND OR THRU HOLES THAT ARE MACHINE CUT THREADED	
DIMENSIONS AND TOLERANCES	
CONFORM TO ASME Y14.5M-1994	
DRAWN	J. A. ABBOTT
CHECKED	F. E. NEEDER

LAWRENCE BERKELEY LABORATORY
UNIVERSITY OF CALIFORNIA-BERKELEY
KAMLAND
4-PI CALIBRATION SYSTEM
GLOVEBOX EXTENSION SIDE PLATE No. 1

SCALE	TYPE	SIZE	REV
1:2 & 1:1	DETAIL	D	

DRAWING NUMBER	SHEET
KA0007	27A1026

REV	DESCRIPTION	CHANGES	DATE

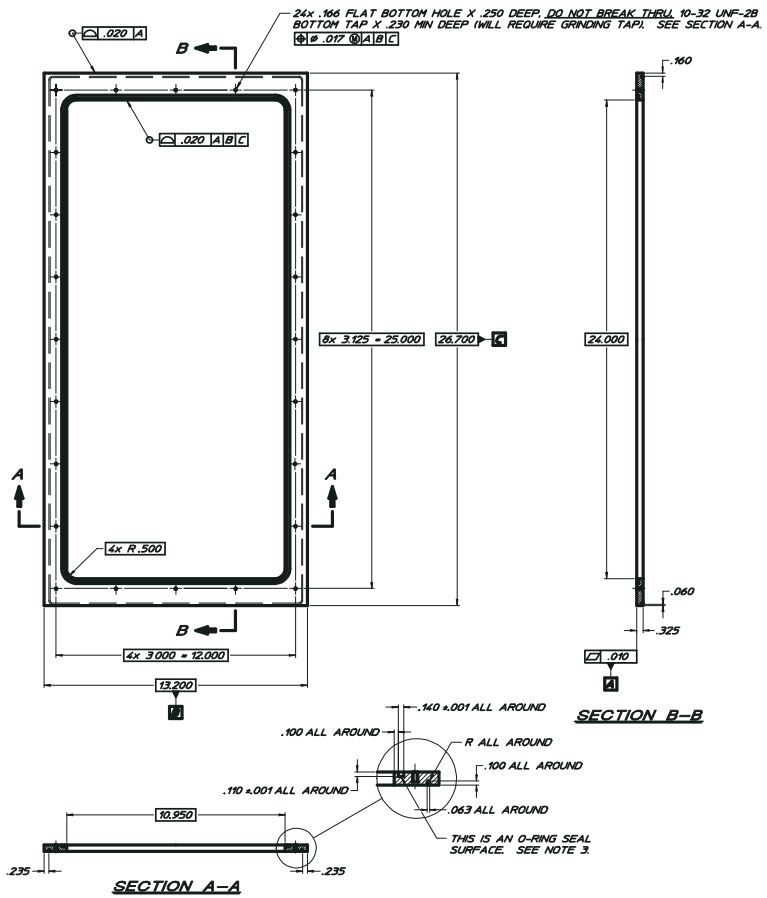

NOTES:

1. THIS PART IS TO BE MACHINED FROM A SINGLE PLATE. THERE ARE TO BE NO WELD JOINTS. ALL SURFACES ARE TO BE MACHINED OR GROUND. STOCK OR SAW-CUR SURFACES ARE NOT ACCEPTABLE. 27A1036
2. UNLESS OTHERWISE SPECIFIED, ALL INSIDE CORNER RADII ARE .010 MAX & CHAMFER ALL EDGES .020 X 45°.
3. THERE ARE TO BE NO TRANSVERSE SCRATCHES OR TOOL MARKS ON THE BOTTOM SURFACE OF THE O-RING GROOVE
4. DIMENSIONING & TOLERANCING IS PER ASME Y14.5M-1994. ALL DIMENSIONS ARE IN INCHES. REFERENCE DIMENSIONS ARE SHOWN IN PARENTHESIS.
5. ESTIMATED WT = 8 LBS.

		PLATE 304 S.S.	
REQUIRED	PART NO	DESCRIPTION	
	SHOP DRAWING	LAWRENCE BERKELEY LABORATORY UNIVERSITY OF CALIFORNIA-BERKELEY	
		KAMLAND	
		L-P1 CALIBRATION SYSTEM	
		GLOVEBOX EXTENSION SIDE PLATE No. 2	
		DETAIL	
		KA0007	27A1036

UNLESS OTHERWISE SPECIFIED
X ± ---- FRAC ± 1/64
XX ± .03 ANGLES ± 2°
XXX ± .015 FRACTIONS ±3/64
TOLERANCE AND CLASS A
MACHINED FINISH OF ALL BORES MAGNETIC CHIP FREE 63 RMS THRU 125 RMS OF ALL OTHER MACHINE TOOL MARKS MACHINE CUT THREADS
BORES ROUND, DIA. MAX. 125 MACHINED BORES BORES ROUND WITHIN 0.5 DIA OTHER BORES
GEOMETRIC DIMS. Y14.5 & ISO 1

DRAWN BY: S.B. ABBOTT
CHK'D BY: E. NEEDER

DATE: 06-4-2
DATE: 06-4-2

REV NO | DATE | CHANGES

REQ	ITEM	PART NUMBER	DESCRIPTION
			PLATE, 304 S.S.

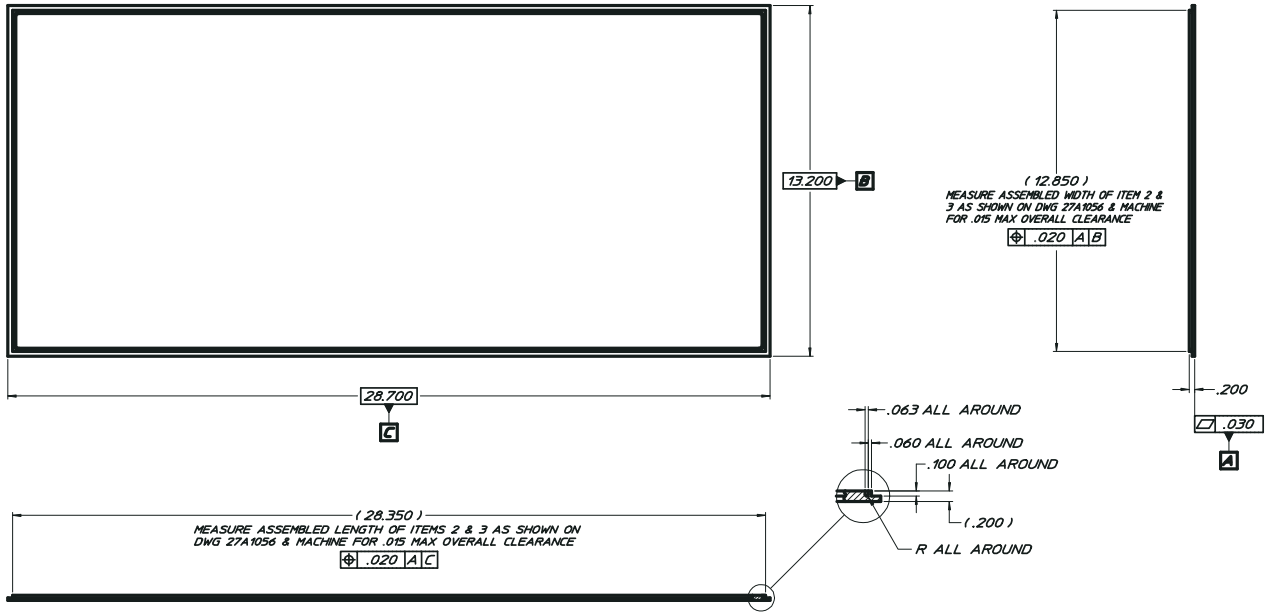

27A1044

NOTE:

1. ALL SURFACES ARE TO BE MACHINED OR GROUND. STOCK OR SAW-CUT SURFACES ARE NOT ACCEPTABLE
2. UNLESS OTHERWISE SPECIFIED, ALL INSIDE CORNER RADII ARE .010 MAX & CHAMFER ALL EDGES .020 X 45°.
3. DIMENSIONING & TOLERANCING IS PER ASME Y14.5M-1994. ALL DIMENSIONS ARE IN INCHES. REFERENCE DIMENSIONS ARE SHOWN IN PARENTHESIS.
4. ESTIMATED WT. = 21 LBS.

REV	DWG	CHK	ZONE	DATE	CHANGES

UNLESS OTHERWISE SPECIFIED
TOLERANCES: .X ± --- FRAC. ±1/64; .XX ± .03 ANGLES ± 2°; .XXX ± .015 FINISH 63
THREADS ARE CLASS 2
CHAMFER ENDS OF ALL SCREW THREADS 30° CUT 1.5 PITCH THRU RELIEF WITH ROUND NOSE TOOL ON MACHINE CUT THREADS
BREAK EDGES .016 MAX. ON MACHINED WORK
REMOVE BURRS WELD SPLATTER & LOOSE SCALE
REFERENCES: ANSI Y14.5 & B46 1.

SHOP ORDERS
ACCT. NO. | SERIAL NO.
DATE ISSD. | DATE REQD. | NO. REQD.
DELIVER TO
SURFACE TREATMENT DEGREASE
IDENT METH.
DWG. BY S.R. ABBOTT DATE 10-20-03
CHK BY K. HEEGER DATE 10-20-03

LAWRENCE BERKELEY LABORATORY
UNIVERSITY OF CALIFORNIA-BERKELEY
KAMLAND
4-PI CALIBRATION SYSTEM
GLOVEBOX EXTENSION TOP PLATE

PATENT CLEAR	DWG. TYPE	SHOWN ON	SCALE	DO NOT SCALE PRINTS
	DETAIL		1:2 & 1:1	
MICROFILMED	DESIGN ACT NO	CATEGORY CODE	DWG. NO.	SIZE / REV.
		KA0001	27A1044	

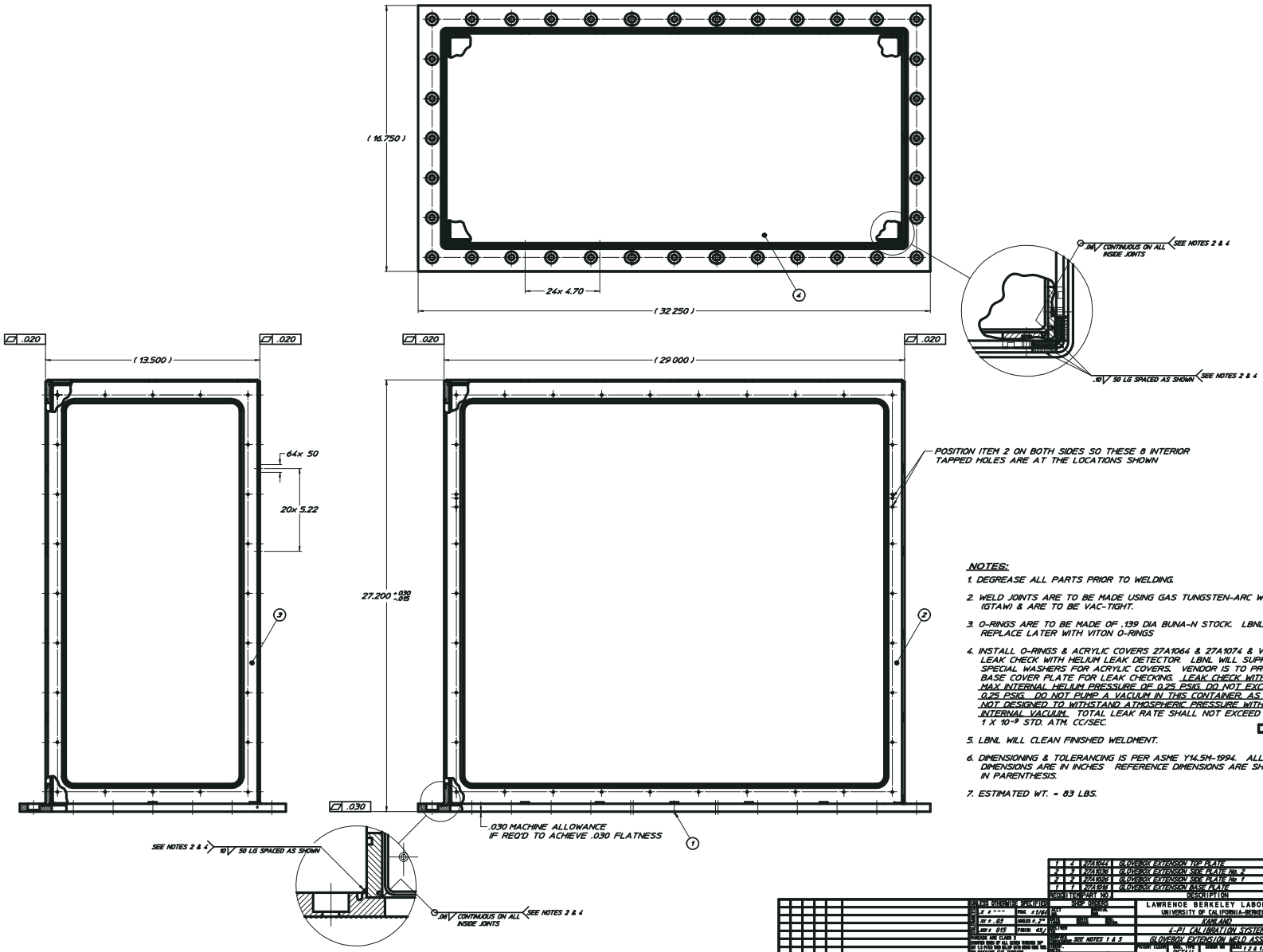

NOTES:

1. DEGREASE ALL PARTS PRIOR TO WELDING.
2. WELD JOINTS ARE TO BE MADE USING GAS TUNGSTEN-ARC WELDING (GTAW) & ARE TO BE VAC-TIGHT.
3. O-RINGS ARE TO BE MADE OF .139 DIA BUNA-N STOCK. LBNL WILL REPLACE LATER WITH VITON O-RINGS
4. INSTALL O-RINGS & ACRYLIC COVERS 27A1064 & 27A1074 & VACUUM LEAK CHECK WITH HELIUM LEAK DETECTOR. LBNL WILL SUPPLY SPECIAL WASHERS FOR ACRYLIC COVERS. VENDOR IS TO PROVIDE BASE COVER PLATE FOR LEAK CHECKING. LEAK CHECK WITH A MAX INTERNAL HELIUM PRESSURE OF 0.25 PSIG. DO NOT EXCEED 0.25 PSIG. DO NOT PUMP A VACUUM IN THIS CONTAINER. AS IT IS NOT DESIGNED TO WITHSTAND ATMOSPHERIC PRESSURE WITH AN INTERNAL VACUUM. TOTAL LEAK RATE SHALL NOT EXCEED 1×10^{-9} STD. ATM. CC/SEC.
5. LBNL WILL CLEAN FINISHED WELDMENT.
6. DIMENSIONING & TOLERANCING IS PER ASME Y14.5M-1994. ALL DIMENSIONS ARE IN INCHES. REFERENCE DIMENSIONS ARE SHOWN IN PARENTHESIS.
7. ESTIMATED WT. = 83 LBS.

27A1056

QTY	ITEM	PART NO	DESCRIPTION
1	4	27A1044	GLOVEBOX EXTENSION TOP PLATE
2	3	27A1063	GLOVEBOX EXTENSION SIDE PLATE No. 2
2	2	27A1073	GLOVEBOX EXTENSION SIDE PLATE No. 1
1	1	27A1015	GLOVEBOX EXTENSION BASE PLATE

UNLESS OTHERWISE SPECIFIED: X ± .1 ANGLES ± 2° XX ± .03 FRACS ± 1/64 XXX ± .015 DECS ±0.3

TOLERANCE AND CLASS A: MACHINE FINISH OF ALL BORES, MACHINE CUT FLATNESS, THE BLUE OR BLACK BORE THE MACHINE CUT THREADS

GENERAL NOTES: DRILL AND MILL BE MACHINED WITH CHAMFER, DEBURR, AND FREE OF SHARP EDGES

CONFORMS TO ASME Y14.5 & ASME B

SHOP: 10/03/95

DRAWN: SEE NOTES 1 & 5

APPROVED: J. B. ABBOTT 10/03/95

M. E. NEEDER 10/03/95

LAWRENCE BERKELEY LABORATORY
UNIVERSITY OF CALIFORNIA-BERKELEY
KANLAND
L-PI CALIBRATION SYSTEM
GLOVEBOX EXTENSION WELD ASSEMBLY

SCALE: DETAIL

SIZE: A

CODE IDENT NO. 95127

DRAWING NO. 27A1056

REV

REVISION CODE | DATE | CHANGES

REQ	ITEM	PART NUMBER	DESCRIPTION
			SHEET, 3/8 THK, LUCITE L ACRYLIC, MAT'L CERTS REQ'D

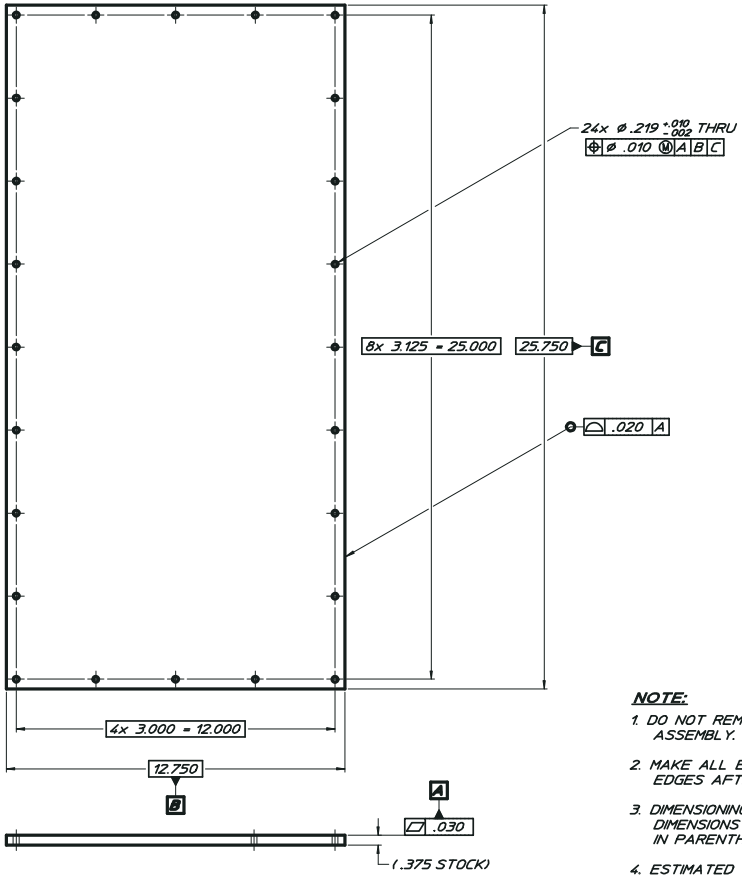

27A1074

NOTE:

1. DO NOT REMOVE PROTECTIVE COVERING ON THE LUCITE UNTIL FINAL ASSEMBLY.
2. MAKE ALL EDGES CLEAR BY APPLYING APPROPRIATE SOLVENT TO EDGES AFTER MACHINING.
3. DIMENSIONING & TOLERANCING IS PER ASME Y14.5M-1994. ALL DIMENSIONS ARE IN INCHES. REFERENCE DIMENSIONS ARE SHOWN IN PARENTHESIS.
4. ESTIMATED WT. = 4 LBS.

REV	DWG	CHK	ZONE	DATE	CHANGES

UNLESS OTHERWISE SPECIFIED
TOLERANCES: .X ± --- FRAC. ± 1/64; .XX ± .03 ANGLES ± 2°; .XXX ± .015 FINISH 63
THREADS ARE CLASS 2
CHAMFER ENDS OF ALL SCREW THREADS 30° CUT 1.5 PITCH TWO RELIEF WITH ROUND NOSE TOOL ON MACHINE CUT THREADS
BREAK EDGES .X16 RAD. ON MACHINED WORK
REMOVE BURRS WELD SPLATTER & LOOSE SCALE
REFERENCES: ANSI Y14.5 & B46.1.

SHOP ORDERS
ACCT. NO. / MATERIAL NO.
DATE TECH. / DATE SUPER. / NO. REQD.
DELIVER TO
SURFACE TREATMENT SEE NOTES 1 & 2
TUBE MECH.
DWG. S.R. ABBOTT DATE 12-20-03
APP. MT K. HEEGER DATE 12-20-03

LAWRENCE BERKELEY LABORATORY
UNIVERSITY OF CALIFORNIA-BERKELEY

KAMLAND
4-PI CALIBRATION SYSTEM
GLOVEBOX EXTENSION COVER PLATE No. 2

PATENT CLEAR | DWG. TYPE DETAIL | SHOWN ON | SCALE 1:2 | DO NOT SCALE DRAWING
WITCHCRAFTLAB | CUSTOM ALLY NO | CATEGORY CODE KA0001 | DWG. NO. 27A1074 | SIZE | REV.

REQ	ITEM	PART NUMBER	DESCRIPTION
			SHEET, 3/8 THK LUCITE (ACRYLIC) MATL CERTS REQD

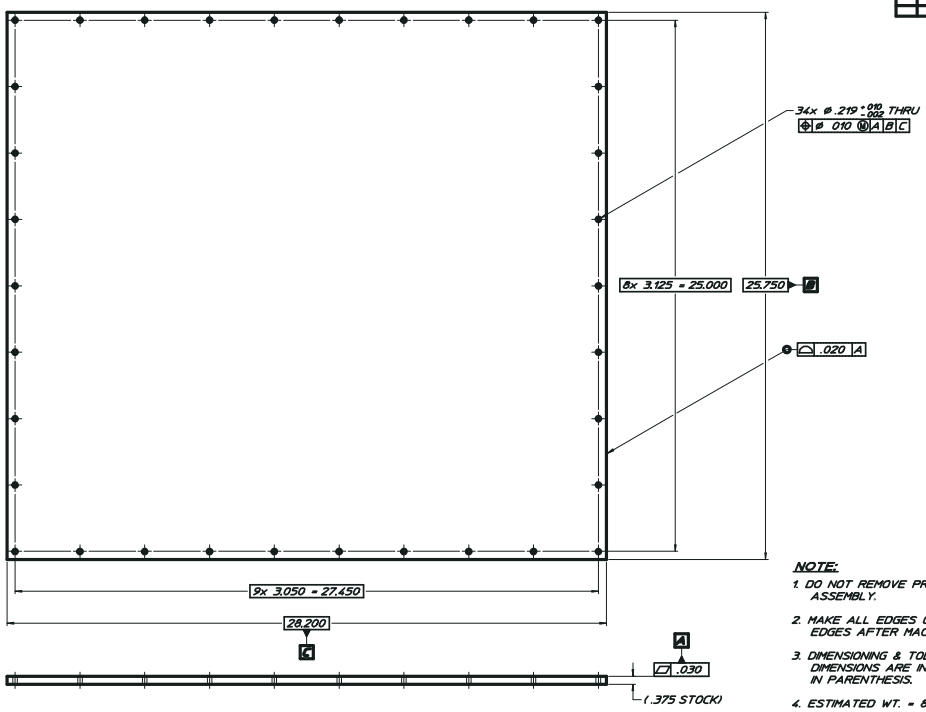

27A1064

NOTE:

1. DO NOT REMOVE PROTECTIVE COVERING ON THE LUCITE UNTIL FINAL ASSEMBLY.
2. MAKE ALL EDGES CLEAR BY APPLYING APPROPRIATE SOLVENT TO EDGES AFTER MACHINING.
3. DIMENSIONING & TOLERANCING IS PER ASME Y14.5M-1994. ALL DIMENSIONS ARE IN INCHES. REFERENCE DIMENSIONS ARE SHOWN IN PARENTHESIS.
4. ESTIMATED WT. = 8 LBS.

REV	CHG	CHK	DATE	CHANGES

UNLESS OTHERWISE SPECIFIED
DECIMALS: X ± ---
FRACT. ± 1/64
ANGLES ± 2°
FINISH 63√
THREADS ARE CLASS 2
CHAMFER EDGE OF ALL SHARP CORNERS 30°
DO NOT SCRIBE OR STAMP ON THIS PART
DO NOT PAINT OR SPRAY
DEBURR, ETC. ETC. ON MACHINED WORK
REMOVE BURRS WELD SPATTER & LOOSE SCALE
REFERENCES: ANSI Y14.5 & ANS 1

SHOP ORDERS
PATT. / MATL / FINISH
FILE / DATE / DWG. / SECTION
DRAWING STANDARD: SEE NOTES 1 & 2
CLASS / SYM.
DRAWN: F.S.D. ABBOTT 10-26-00
APP: K. NEESER 10-26-00

LAWRENCE BERKELEY LABORATORY
UNIVERSITY OF CALIFORNIA-BERKELEY
KAHLANI
4-PI CALIBRATION SYSTEM
GLOVEBOX EXTENSION COVER PLATE No. 1
PATENT CLEAR | DWG. TYPE: DETAIL | DRAWN ON | SCALE 1:2 | SHEET | OF | REV
INTERPRETER | DWG. NO. KA0001 | CONTROL CODE 27A1064 | SIZE | REV.