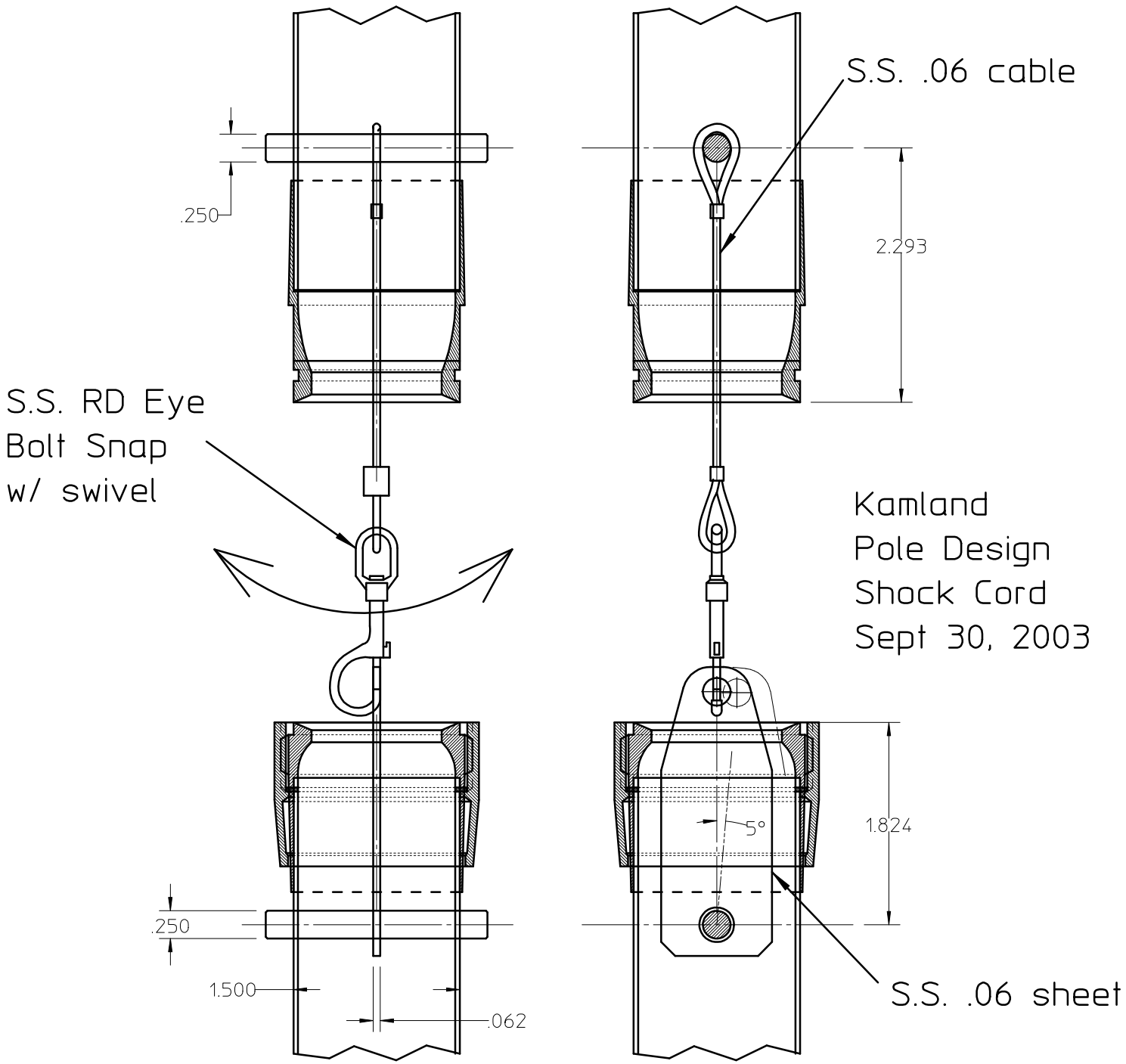
S.S. .06 cable
.250
2.293
S.S. RD Eye
Bolt Snap
w/ swivel
Kamland
Pole Design
Shock Cord
Sept 30, 2003
5°
1.824
.250
1.500
.062
S.S. .06 sheet