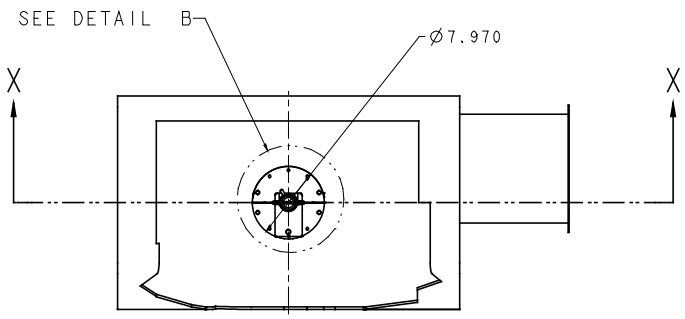

DETAIL B
SCALE 1/1

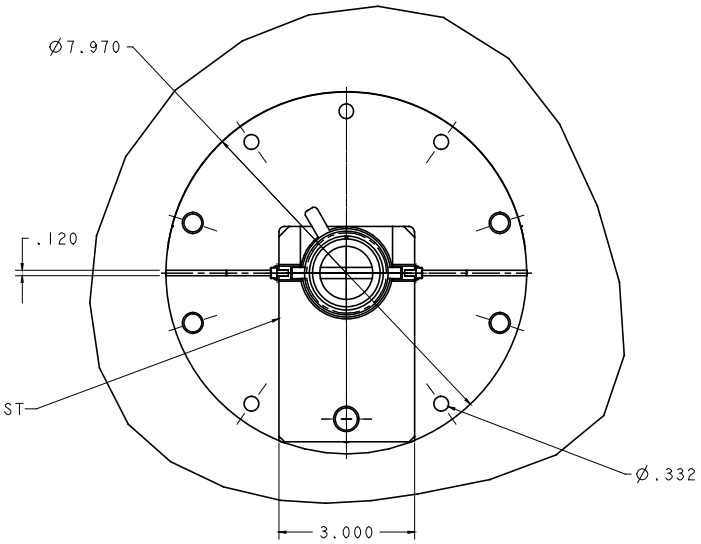

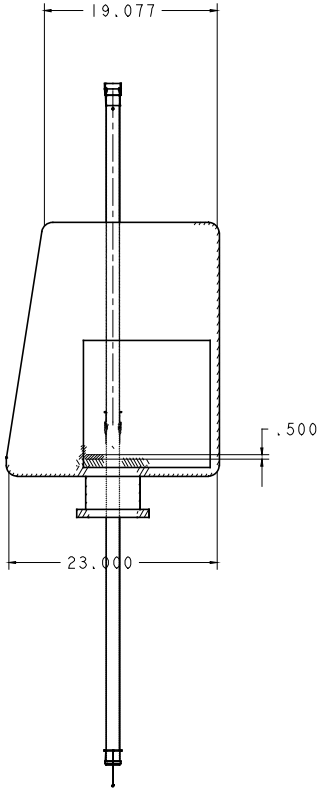

SECTION Y-Y

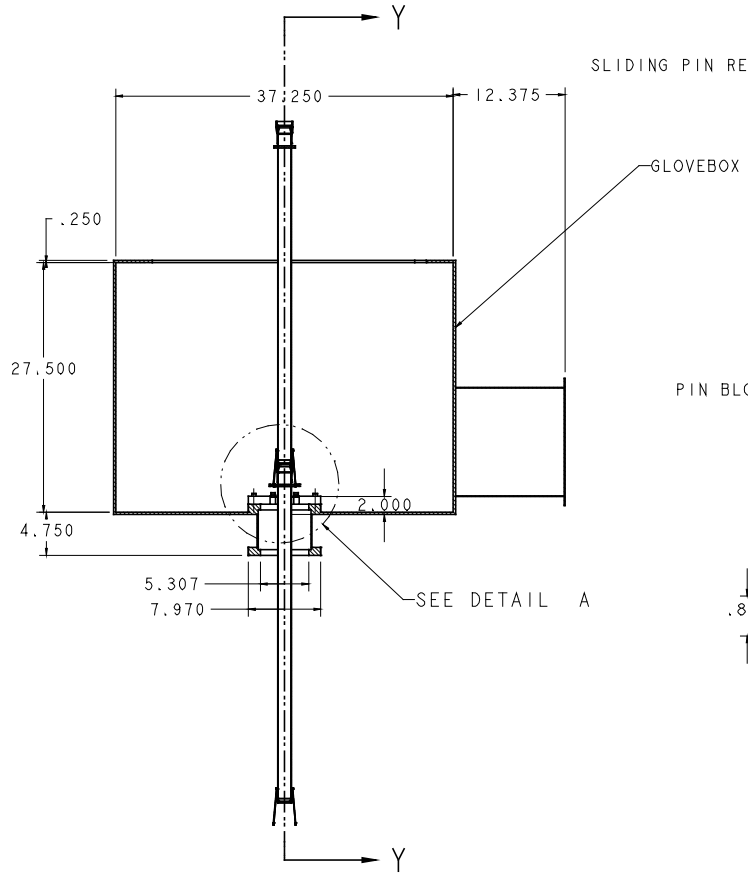

SECTION X-X
SCALE 1/5

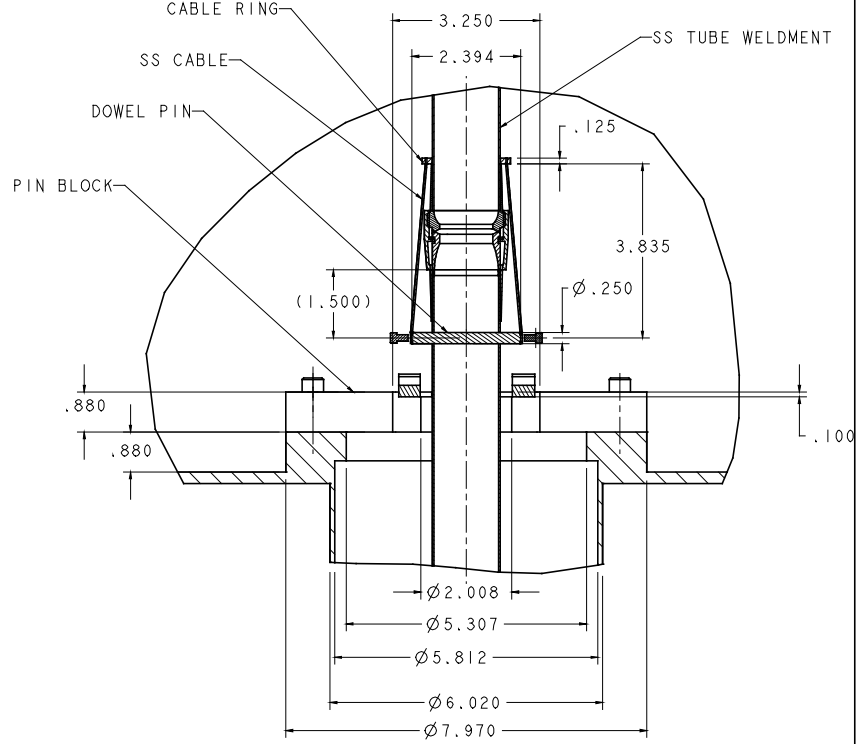

DETAIL A
SCALE 1/1