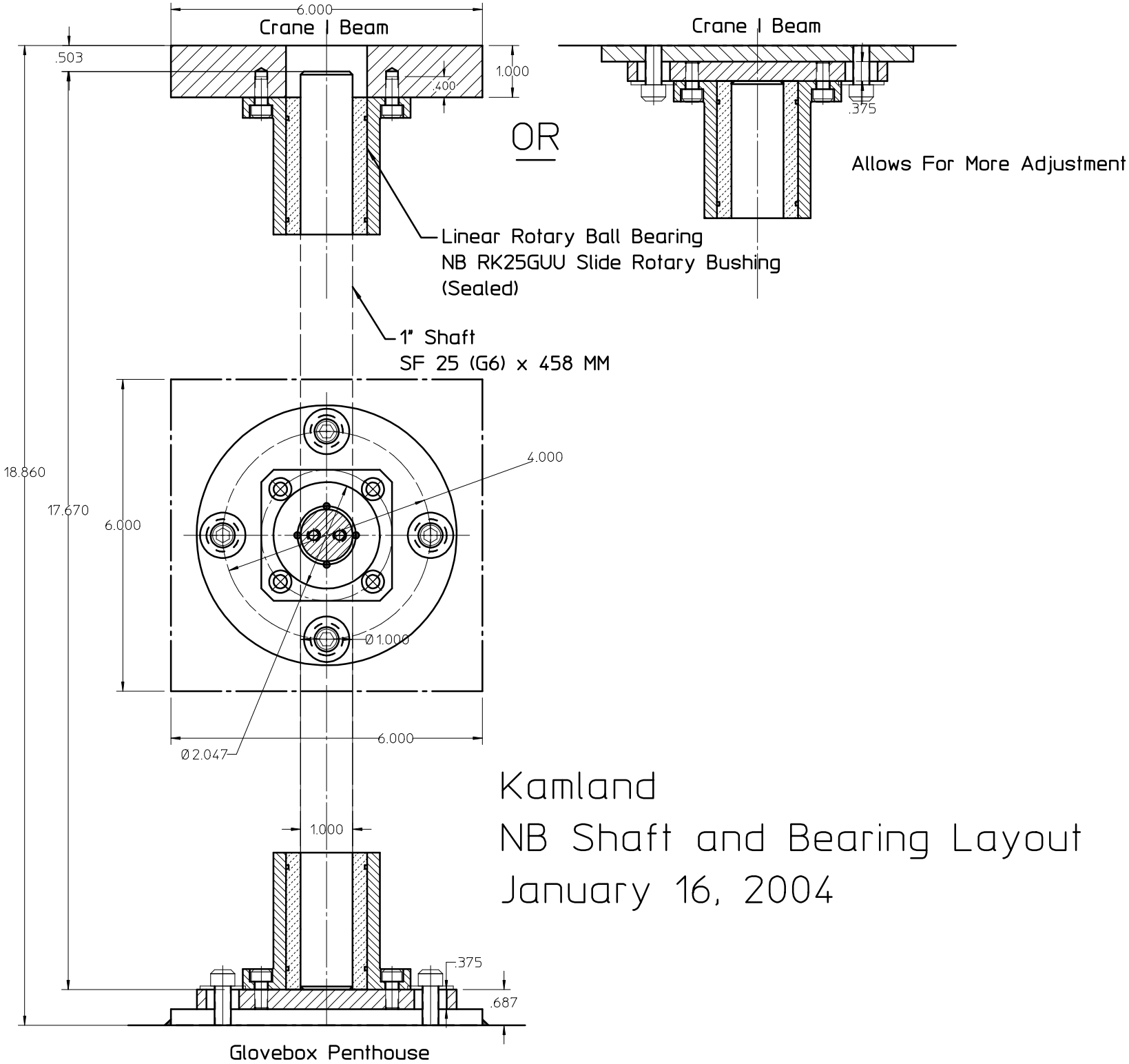

Kamland

NB Shaft and Bearing Layout

January 16, 2004