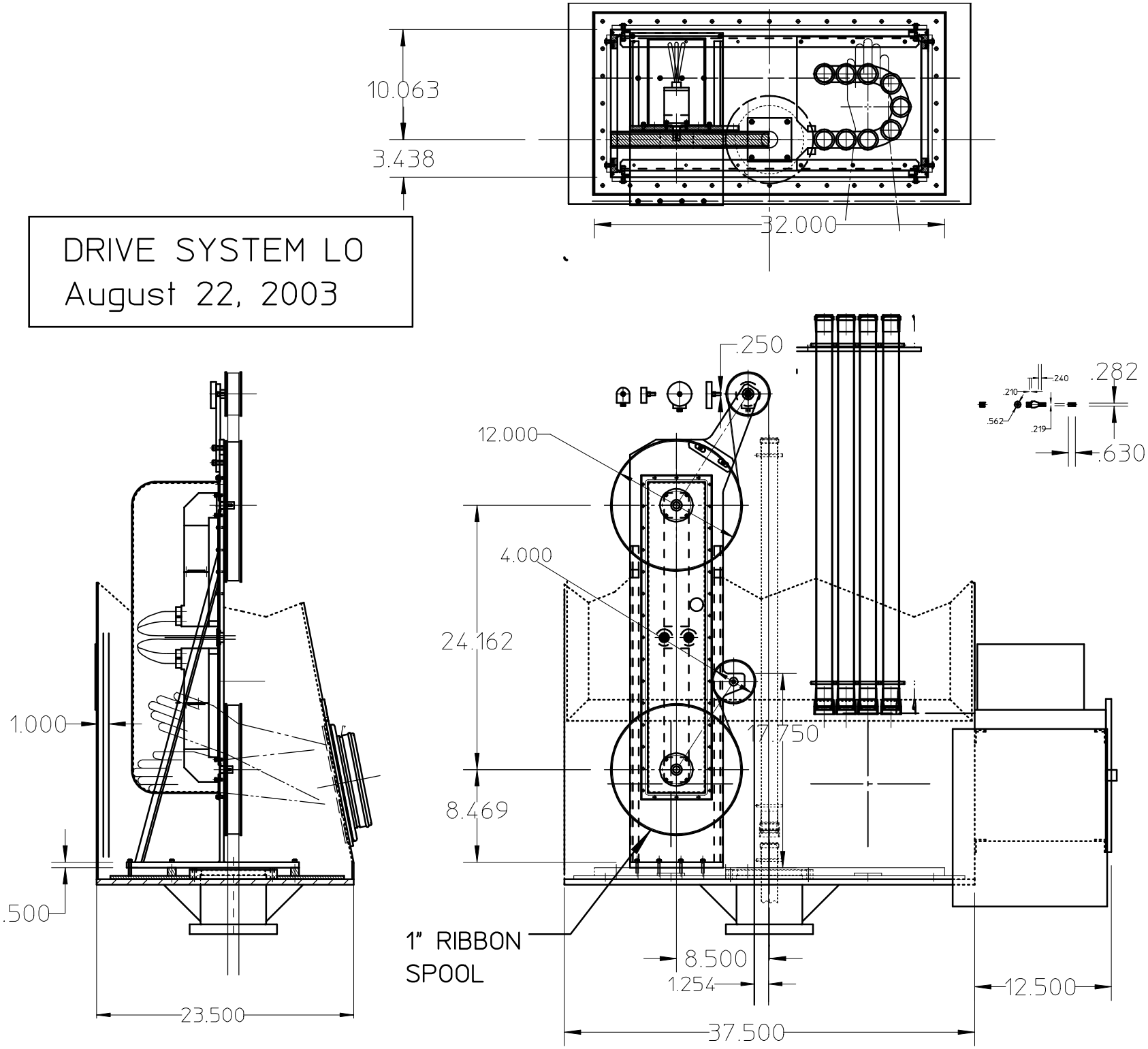DRIVE SYSTEM LO
August 22, 2003