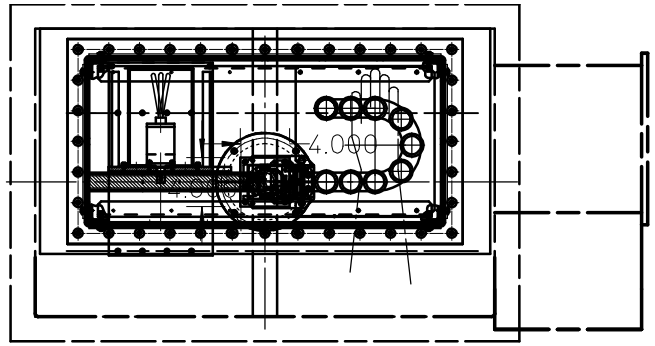
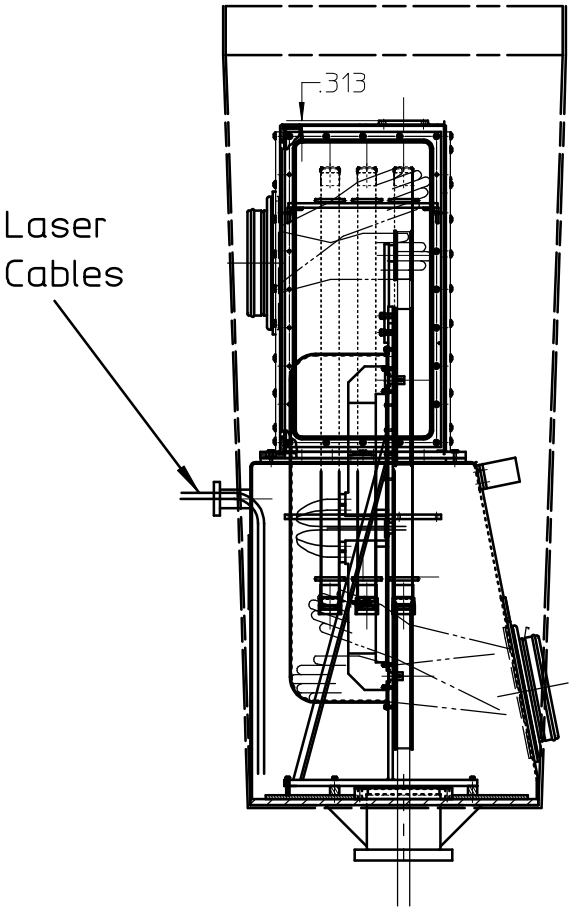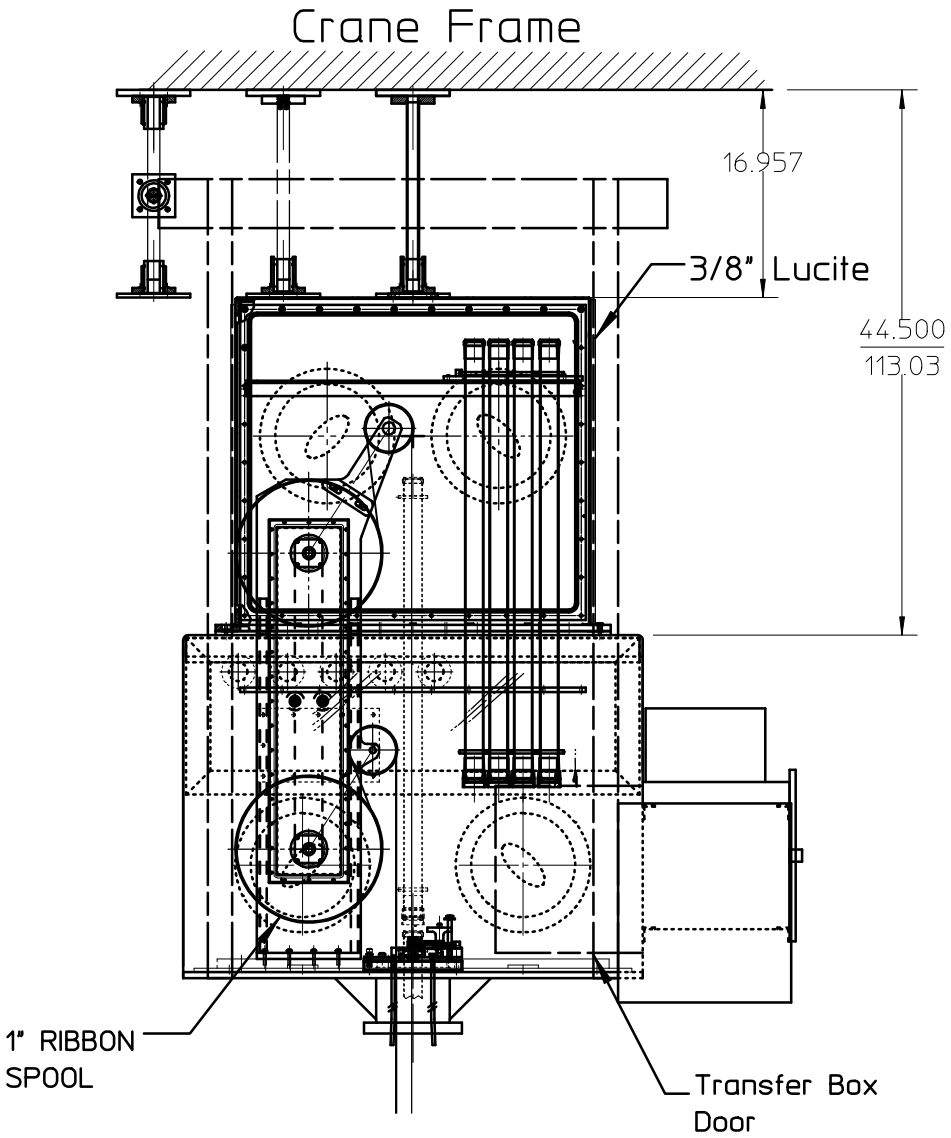
Preliminary Design
DECEMBER 15 2003