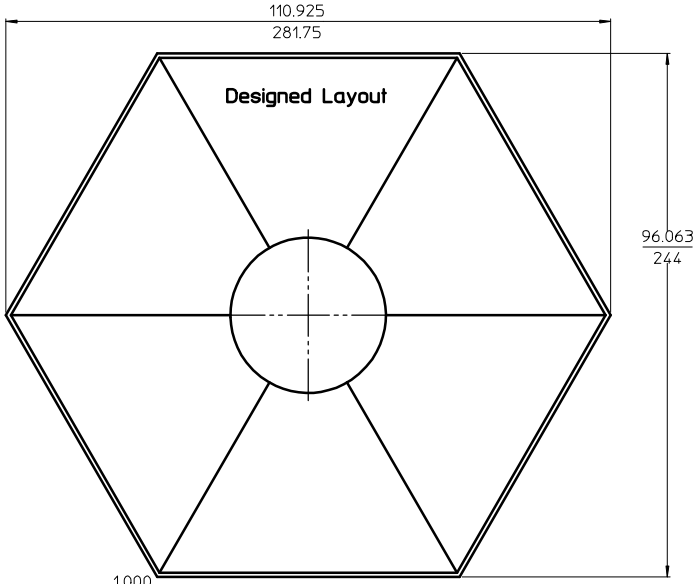

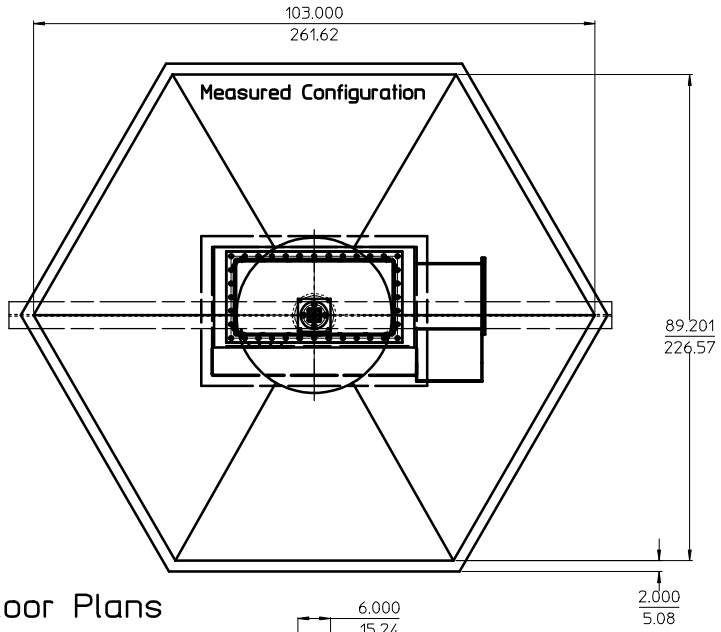

Tent Floor Plans

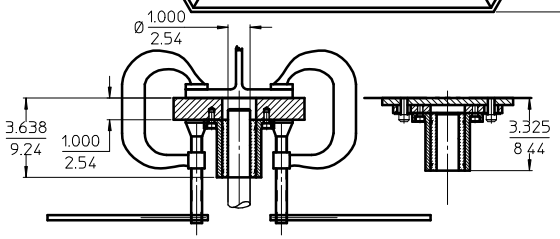

Detail A

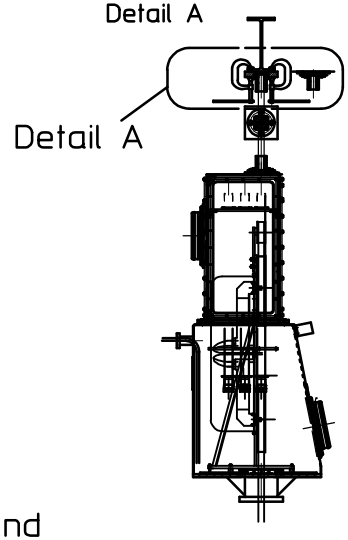

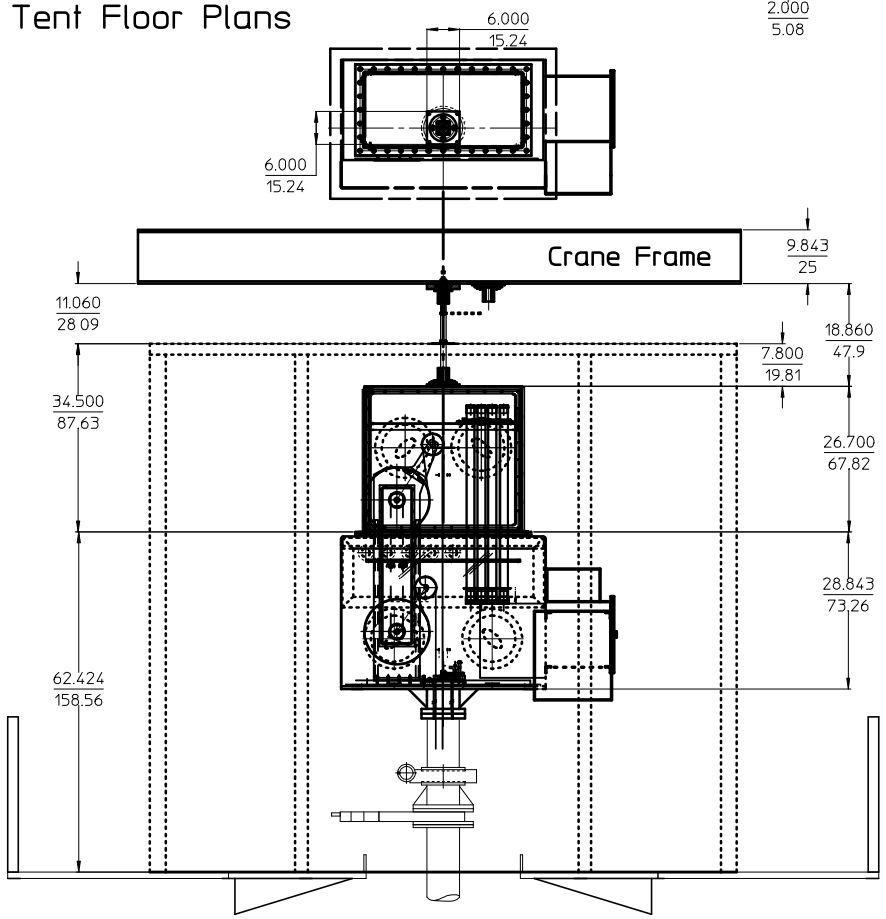

Kamland
Glovebox Support Bearing Layout
January 20, 2004

Note: All dimensions are in inches over centimeters.