REQ	ITEM	PART NUMBER	DESCRIPTION
1	1		COUPLING, MALE, TITANIUM
1	2		COUPLING, FEMALE, TITANIUM
A/R	3		TUBE, 1.500"OD X .035"WALL, TITANIUM
A/R	4		DOWEL PIN, 1/4" DIA., TITANIUM
A/R	5		DOWEL PIN, 1/4" DIA., TITANIUM
A/R	6		DOWEL PIN, 1/4" DIA., TITANIUM

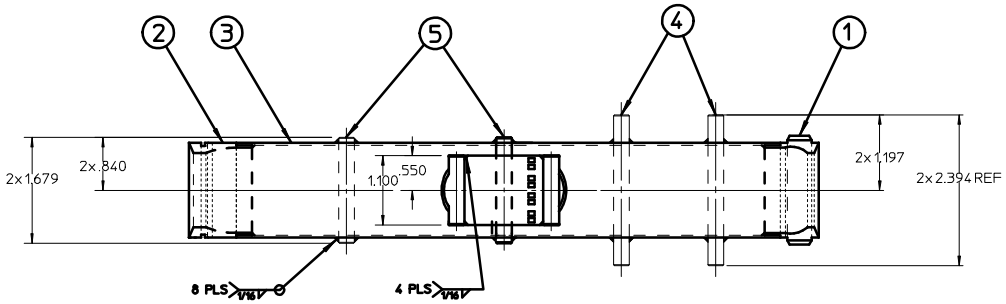

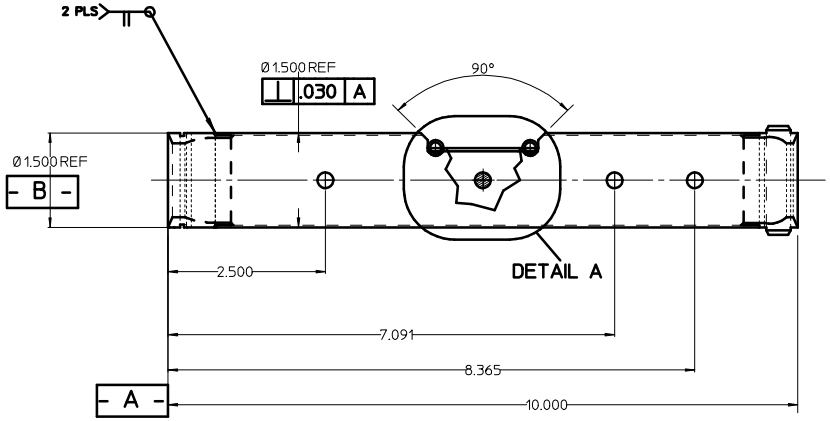

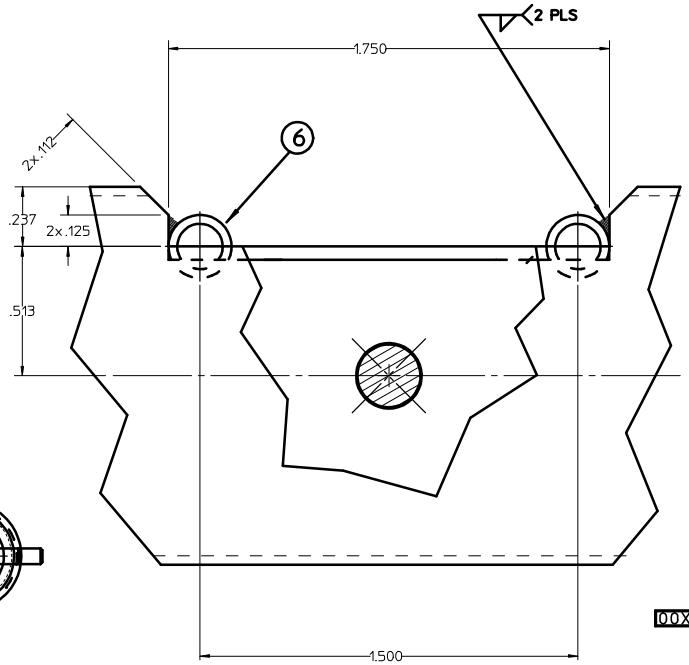

DETAIL A
SCALE: 4X

00X0004A

NOTES:

1. ALL DIMENSIONS ARE INCHES.

REV	DWG	CHK	ZONE	DATE	CHANGES

UNLESS OTHERWISE SPECIFIED
TOLERANCES: .X ± 1 — FRAC. ±1/64; .XX ± .03 — ANGLES ±1/4°; .XXX ± .015 — FINISH 63 √
THREADS ARE CLASS 2
CHAMFER ENDS OF ALL SCREW THREADS 30°
CUT 1.5 PITCH THRU RELIEF WITH ROUND NOSE TOOL ON MACHINE CUT THREADS.
BREAK EDGES .016 MAX. ON MACHINED WORK
REMOVE BURRS WELD SPLATTER & LOOSE SCALE
REFERENCES: ANSI Y14.5 & B46.1.

SHOP ORDERS
ACCT. NO. — SERIAL NO.
DATE ISSD — DATE REQD. — IND. REQD.
DELIVER TO
SURFACE TREATMENT: DEGREASE
IDENT METH.: TAG
DWG BY: Y. MINAMIHARA — DATE: 2-24-04
CHK. BY — DATE

LAWRENCE BERKELEY LABORATORY
UNIVERSITY OF CALIFORNIA-BERKELEY
KAMLAND
4-PI CALIBRATION SYSTEM
TUBE SEGMENT - CABLE ATTACHMENT

PATENT CLEAR	DWG. TYPE	SHOWN ON	SCALE	DO NOT SCALE PRINTS
	ASSEMBLY		FULL	
MICROFILMED	DESIGN ACCT NO	CATEGORY CODE	DWG. NO	SIZE / REV.
		KA0001		