REQ	ITEM	PART NUMBER	DESCRIPTION
1	1		COUPLING, MALE, TITANIUM
A/R	2		TUBE, 1.500"OD, .035" WALL, TITANIUM
A/R	3		DOWEL PIN, 1/4" DIA., TITANIUM
A/R	4		DOWEL PIN, 1/4" DIA., TITANIUM

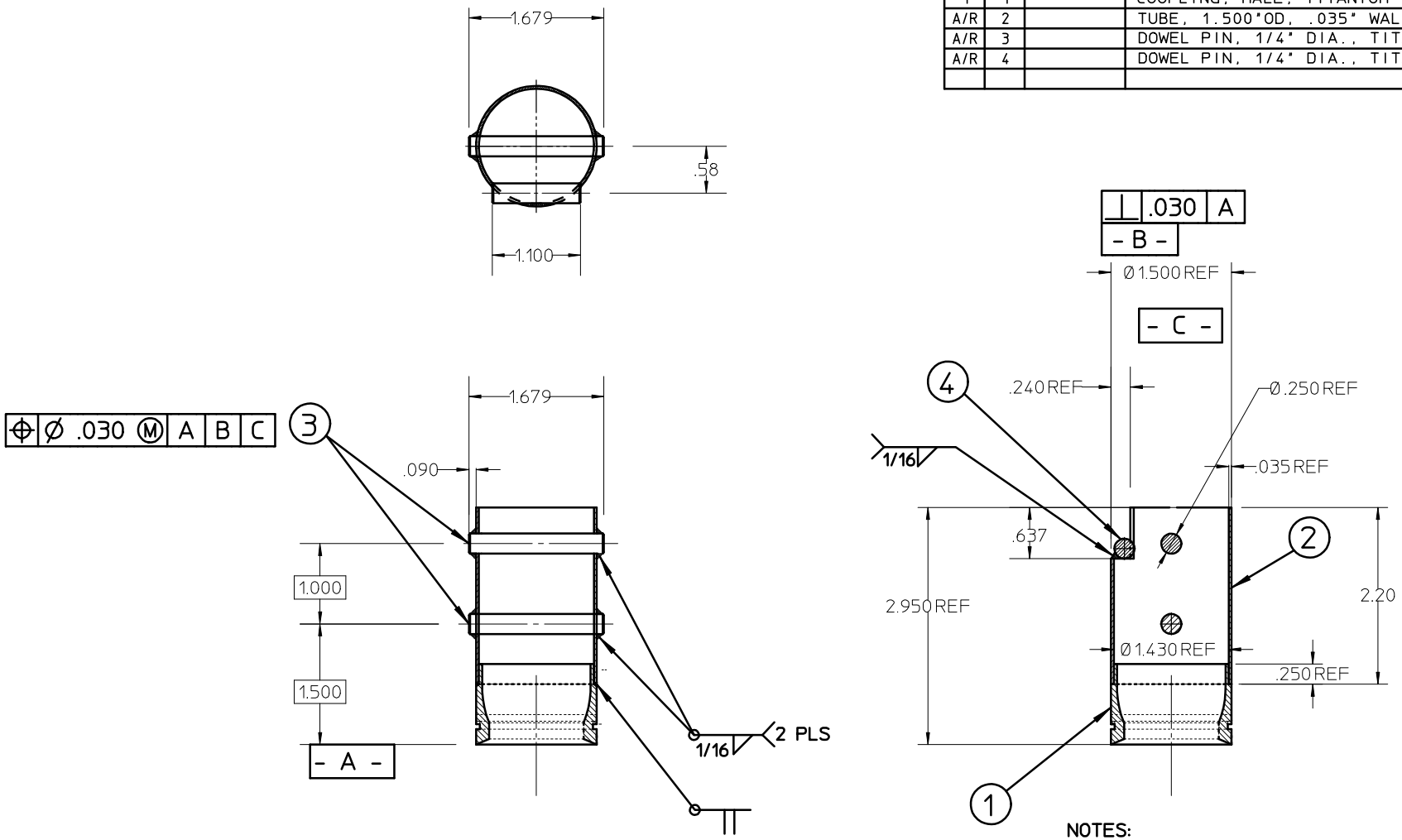

NOTES:

1. ALL DIMENSIONS ARE IN INCHES.

REV	DWG	CHK	ZONE	DATE	CHANGES

UNLESS OTHERWISE SPECIFIED

TOLERANCES			
.X ± .1	FRAC ±1/64		
.XX ± .03	ANGLES ±1/4°		
.XXX ± .015	FINISH 63 √		

THREADS ARE CLASS 2
CHAMFER ENDS OF ALL SCREW THREADS 30°.
CUT 1.5 PITCH THRD RELIEF WITH ROUND NOSE TOOL ON MACHINE CUT THREADS.
BREAK EDGES .016 MAX. ON MACHINED WORK
REMOVE BURRS WELD SPLATTER & LOOSE SCALE
REFERENCES: ANSI Y14.5 & B46.1.

SHOP ORDERS

ACCT. NO.	SERIAL NO.	
DATE ISSD	DATE REQD.	NO. REQD.
DELIVER TO		
SURFACE TREATMENT	DEGREASE	
IDENT. METH.	TAG	
DWG BY	Y. MINAMIHARA	DATE 2-24-04
CHK. BY		DATE

LAWRENCE BERKELEY LABORATORY
UNIVERSITY OF CALIFORNIA-BERKELEY

KAMLAND

4-PI CALIBRATION SYSTEM

END COUPLING - CABLE ATTACHMENT

PATENT CLEAR	DWG. TYPE	SHOWN ON	SCALE	DO NOT SCALE PRINTS
	ASSEMBLY		FULL	
MICROFILMED	DESIGN ACCT. NO	CATEGORY CODE	DWG. NO.	SIZE / REV.
		KA0001		