Material: 3/8 x .058W Seamless SS Tube

Gen. Tol.: Plus/minus .010

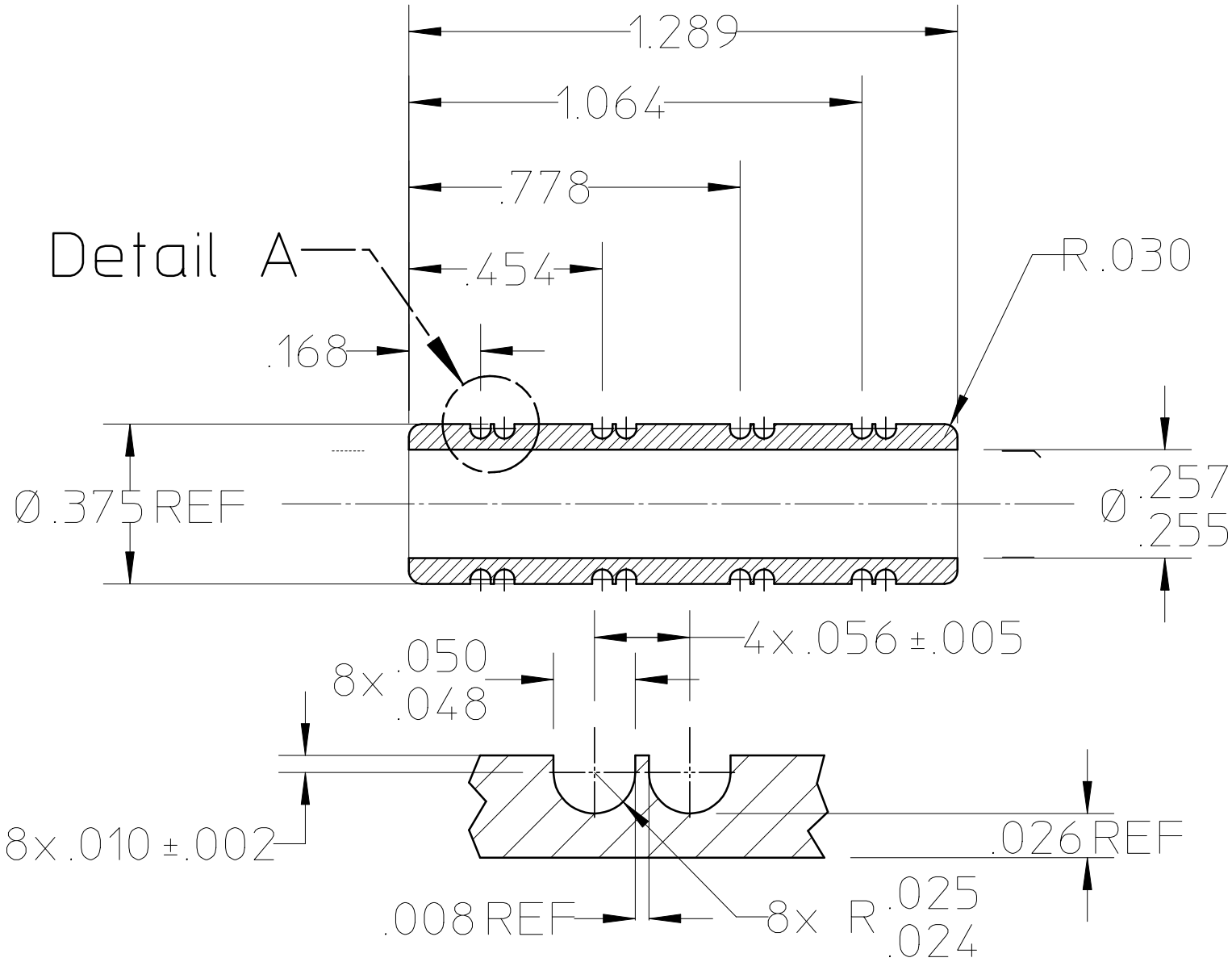

Detail A

Scale: 8x