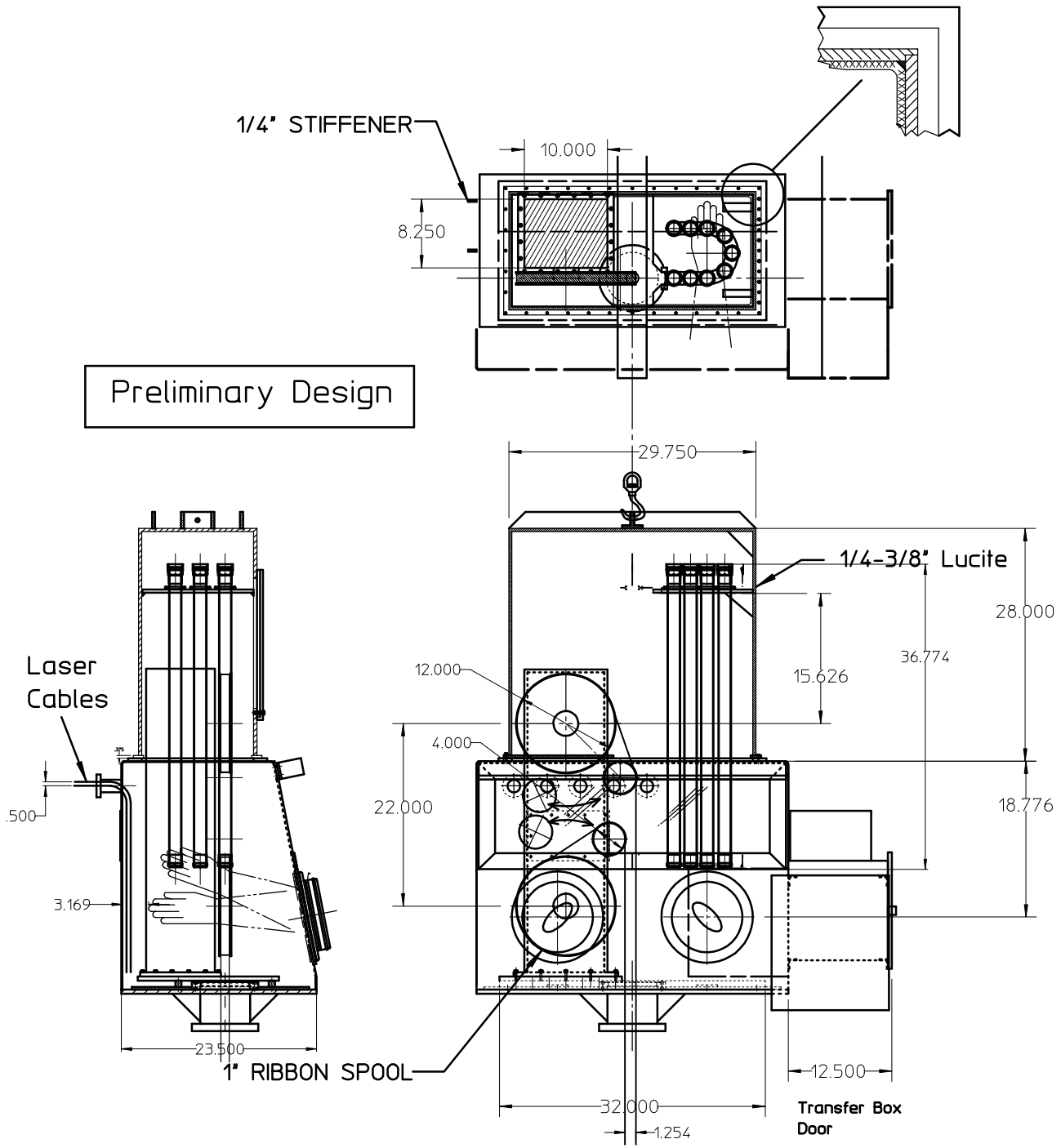
1/4" STIFFENER
10.000
8.250
Preliminary Design
29.750
1/4-3/8" Lucite
28.000
36.774
15.626
12.000
4.000
22.000
18.776
Laser
Cables
.500
3.169
23.500
1" RIBBON SPOOL
12.500
32.000
1.254
Transfer Box
Door