REQ	ITEM	PART NUMBER	DESCRIPTION
			ROD, 304 S.S.

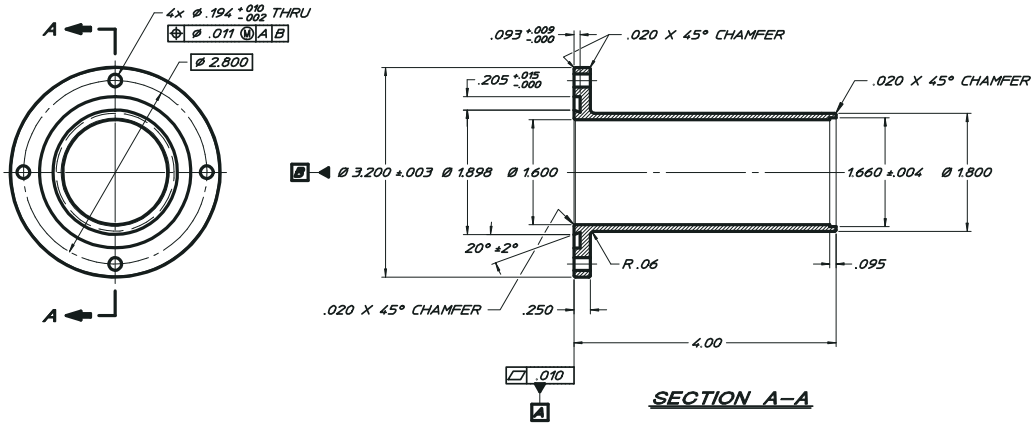

SECTION A–A

27A1343

NOTES:

1. UNLESS OTHERWISE SPECIFIED, TOTAL RUNOUT ON ALL SURFACES IS .010 WITH RESPECT TO DATUMS A & B.
2. UNLESS OTHERWISE SPECIFIED, ALL INSIDE CORNER RADII ARE .010 MAX.
3. DIMENSIONING & TOLERANCING IS PER ASME Y14.5M-1994. ALL DIMENSIONS ARE IN INCHES. REFERENCE DIMENSIONS ARE SHOWN IN PARENTHESIS.

REV	DWG	CHK	ZONE	DATE	CHANGES

UNLESS OTHERWISE SPECIFIED

TOLERANCES			
	X ± ---	FRAC	±1/64
	.XX ± .03	ANGLES	±.1°
	.XXX ± .010	FINISH	63√

THREADS ARE CLASS 2
CHAMFER ENDS OF ALL SCREW THREADS 30°, CUT 1.5 PITCH TWO RELIEF WITH ROUND NOSE TOOL ON MACHINE CUT THREADS.
BREAK EDGES .016 MAX. ON MACHINED WORK
REMOVE BURRS WELD SPLATTER & LOOSE SCALE
REFERENCES: ANSI Y14.5 & B46.1.

SHOP ORDERS

ACCT. NO.		SERIAL NO	
DATE ISSD	DATE REQD	NO REQD	
DELIVER TO			
SURFACE TREATMENT			
IDENT. METH.			
DWG BY	S.R. ABBOTT	DATE	7-20-04
CHK BY	K HEEGER	DATE	7-20-04

LAWRENCE BERKELEY LABORATORY
UNIVERSITY OF CALIFORNIA-BERKELEY

KAMLAND

4-PI CALIBRATION SYSTEM

SLIP RING CONNECTION ENCLOSURE

PATENT CLEAR	DWG TYPE	SHOWN ON	SCALE	DO NOT SCALE PRINTS
	DETAIL		1 : 1	
MICROFILMED	DESIGN ACCT. NO	CATEGORY CODE	DWG. NO.	SIZE / REV.
		KA0001	27A1343	