REQ	ITEM	PART NUMBER	DESCRIPTION
			PLATE, 304 S.S.

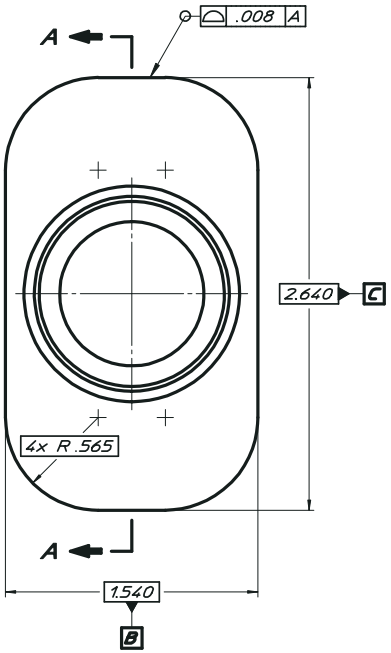

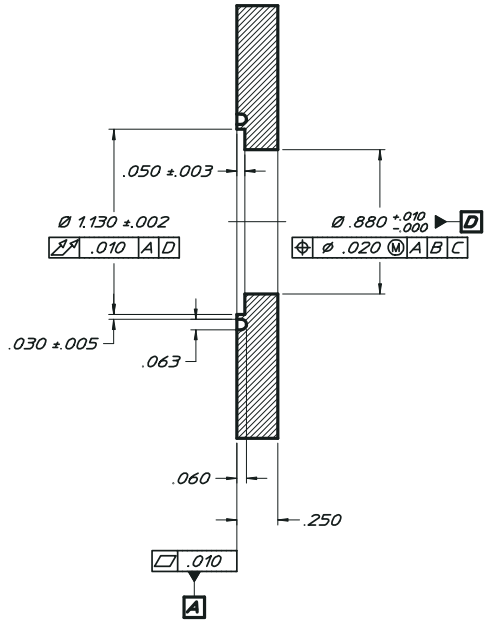

27A1293

SECTION A–A

NOTES:

1. UNLESS OTHERWISE SPECIFIED, ALL EXTERIOR CORNERS ARE TO REMAIN SHARP.
2. DIMENSIONING & TOLERANCING IS PER ASME Y14.5M-1994. ALL DIMENSIONS ARE IN INCHES. REFERENCE DIMENSIONS ARE SHOWN IN PARENTHESIS.

REV	DWG	CHK	ZONE	DATE	CHANGES

UNLESS OTHERWISE SPECIFIED

TOLERANCES			
	X ± ---	FRAC. ±1/64	
	.XX ± .03	ANGLES ±.1°	
	.XXX ± .010	FINISH 63√	

THREADS ARE CLASS 2
CHAMFER ENDS OF ALL SCREW THREADS 30°
CUT 1.5 PITCH THRD RELIEF WITH ROUND NOSE TOOL ON MACHINE CUT THREADS.
BREAK EDGES .016 MAX. ON MACHINED WORK
REMOVE BURRS WELD SPLATTER & LOOSE SCALE
REFERENCES: ANSI Y14 5 & B46 1.

SHOP ORDERS

ACCT. NO.		SERIAL NO	
DATE ISSD	DATE REQD.	NO. REQD.	
DELIVER TO			
SURFACE TREATMENT			
IDENT METH.			
DWG. BY	S.R. ABBOTT	DATE	1-20-04
CHK. BY	K. HEEGER	DATE	1-20-04

LAWRENCE BERKELEY LABORATORY
UNIVERSITY OF CALIFORNIA-BERKELEY

KAMLAND

4-PI CALIBRATION SYSTEM

ENCODER CONNECTION ENCLOSURE END PLATE

PATENT CLEAR	DWG TYPE	SHOWN ON	SCALE	DO NOT SCALE PRINTS
	DETAIL		2 : 1	
MICROFILMED	DESIGN ACCT. NO.	CATEGORY CODE	DWG. NO.	SIZE / REV.
		KA0001	27A1293	