REQ	ITEM	PART NUMBER	DESCRIPTION
			PLATE, 304 S.S.

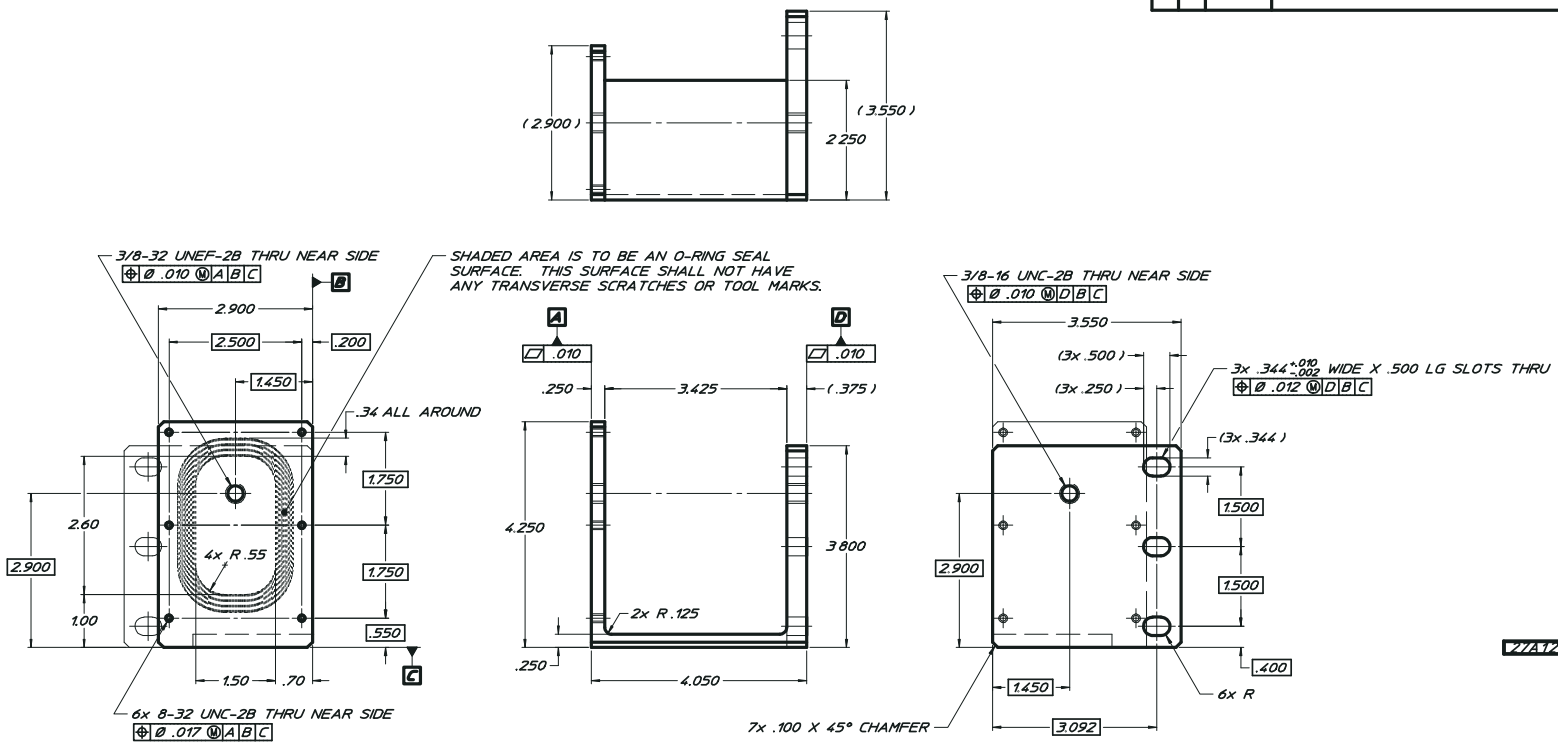

NOTES:

1. UNLESS OTHERWISE SPECIFIED, ALL INSIDE CORNER RADII ARE .010 MAX.
2. DIMENSIONING & TOLERANCING IS PER ASME Y14.5M-1994. ALL DIMENSIONS ARE IN INCHES. REFERENCE DIMENSIONS ARE SHOWN IN PARENTHESIS.

REV	DWG	CHK	ZONE	DATE	CHANGES

UNLESS OTHERWISE SPECIFIED
TOLERANCES: .X ± --- FRAC. ± 1/64; .XX ± .03 ANGLES ± 1°; .XXX ± .010 FINISH 63
THREADS ARE CLASS 2
CHAMFER ENDS OF ALL SCREW THREADS 30° CUT 1.5 PITCH TWO RELIEF WITH ROUND NOSE TOOL ON MACHINE CUT THREADS
BREAK EDGES .X16 MAX. ON MACHINED WORK
REMOVE BURRS WELD SPLATTER & LOOSE SCALE
REFERENCES: ANSI Y14.5 & B46 1.

SHOP ORDERS
ACCT. NO. / MATERIAL NO.
DATE ENTER / DATE DESIR. / REQ. QUAN.
DELIVER TO
SURFACE TREATMENT
TOLERANCE
DWG. BY S.R. ABBOTT DATE 5-20-04
CHK BY K. HEEGER DATE 7-20-04

LAWRENCE BERKELEY LABORATORY
UNIVERSITY OF CALIFORNIA-BERKELEY
KAMLAND
4-PI CALIBRATION SYSTEM
ENCODER LOWER MOUNTING BRACKET

PATENT CLEAR	DWG. TYPE	SHOWN ON	SCALE	DO NOT SCALE DRAWING
	DETAIL		1:1	
WITHDRAFTLINES	CUSTOM ALLT NO	CATEGORY CODE	DWG. NO.	SIZE	REV.
		KA0001	27A1264		