REQ	ITEM	PART NUMBER	DESCRIPTION
			PLATE, 304 S.S.

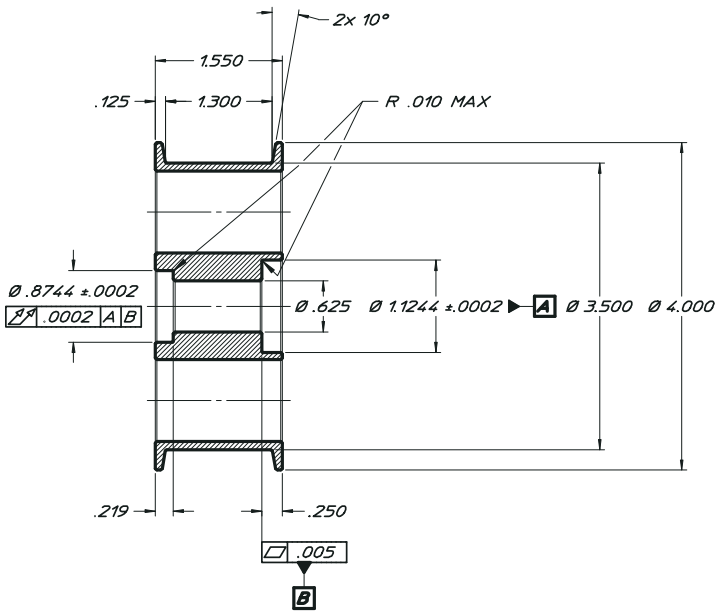

SECTION A–A

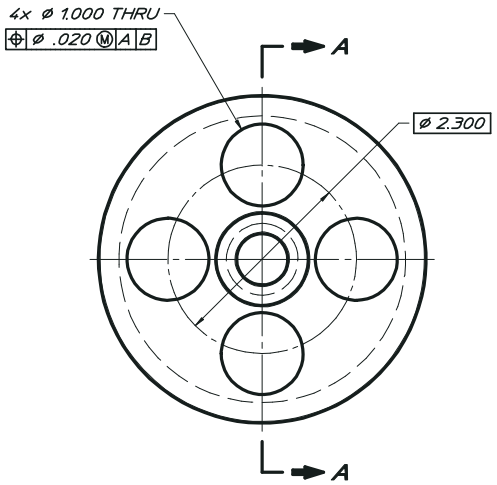

27A1243

NOTES:

1. UNLESS OTHERWISE SPECIFIED, TOTAL RUNOUT ON ALL SURFACES IS .005 MAX WITH RESPECT TO DATUMS A & B.
2. UNLESS OTHERWISE SPECIFIED, ALL INSIDE CORNER RADII ARE .020 MAX & CHAMFER ALL CORNERS .020 X 45°.
3. DIMENSIONING & TOLERANCING IS PER ASME Y14.5M-1994. ALL DIMENSIONS ARE IN INCHES. REFERENCE DIMENSIONS ARE SHOWN IN PARENTHESIS.

REV	DWG	CHK	ZONE	DATE	CHANGES

UNLESS OTHERWISE SPECIFIED

TOLERANCES			
	X ± ---	FRAC. ±1/64	
	.XX ± .03	ANGLES ±.1°	
	.XXX ± .010	FINISH 63√	

THREADS ARE CLASS 2
CHAMFER ENDS OF ALL SCREW THREADS 30°
CUT 1.5 PITCH THRD RELIEF WITH ROUND NOSE TOOL ON MACHINE CUT THREADS.
BREAK EDGES .016 MAX. ON MACHINED WORK
REMOVE BURRS WELD SPLATTER & LOOSE SCALE
REFERENCES: ANSI Y14 5 & B46 1.

SHOP ORDERS

ACCT. NO.	SERIAL NO	
DATE ISSD	DATE REQD.	NO. REQD.
DELIVER TO		
SURFACE TREATMENT		
IDENT METH.		
DWG. BY S.R. ABBOTT	DATE 1-20-04	
CHK. BY K. HEEGER	DATE 1-20-04	

LAWRENCE BERKELEY LABORATORY
UNIVERSITY OF CALIFORNIA-BERKELEY

KAMLAND
4-PI CALIBRATION SYSTEM
PULLEY

PATENT CLEAR	DWG TYPE	SHOWN ON	SCALE	DO NOT SCALE PRINTS
	DETAIL		1 : 1	
MICROFILMED	DESIGN ACCT. NO.	CATEGORY CODE	DWG. NO.	SIZE / REV.
		KA0001	27A1243	