27A1142	REQD	ITEM	PART NUMBER	DESCRIPTION
				304 STAINLESS STEEL

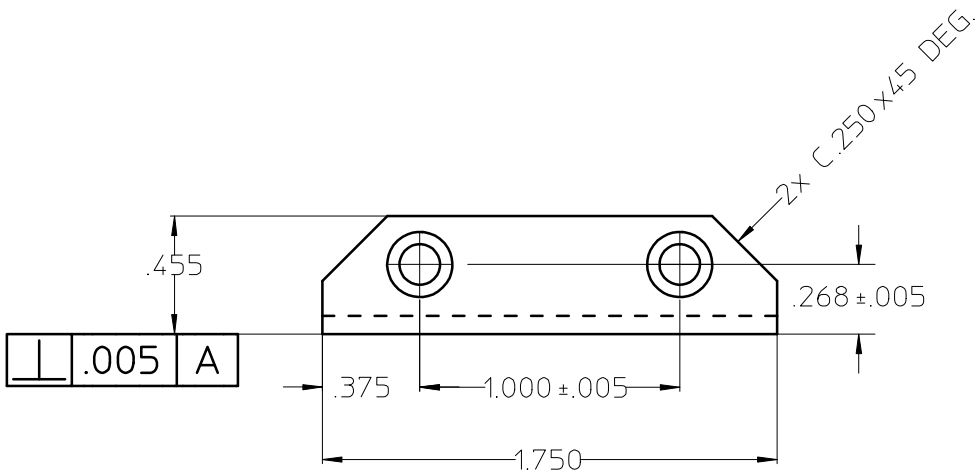

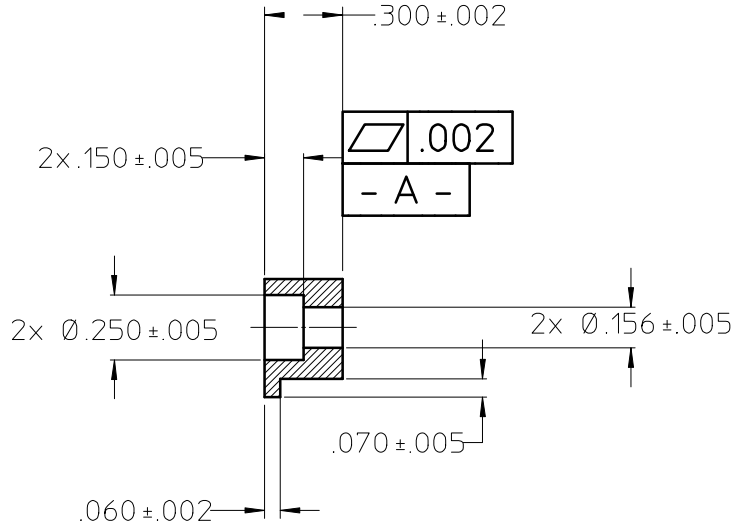

NOTE: ALL DIMENSIONS ARE IN INCHES.

REV	DWN	CHK	DATE	DESCRIPTION

UNLESS OTHERWISE SPECIFIED
TOLERANCE .X ±.1 .XX ± .03 .XXX ±.015
SURFACE FINISH 63 √

1. SAWED, FLAMECUT, SHEARED OR CUT STOCK FINISH.
2. THREADS CLASS 2
3. CHAMFER ENDS OF ALL SCREW THRDS 30°.
4. 1 1/2 PITCH RELIEF WITH ROUND NOSE TOOL ON ALL MACHINE CUT THRDS.
5. BREAK EDGES 1/64 MAX. ON MACHINE WORK.
6. REMOVE BURRS, LOOSE SCALE AND WELD SPLATTER.
7. REF.-USASI OR ASA STDS SECT Y-14 & B46-1.

SHOP ORDERS

ACCT NO	SER NO	
DATE ISSD	DATE REQD	NO REQD
DELIVER TO		
SURFACE TREATMENT	DEGREASE	
IDENTIFIC METHOD	TAG	
DWG BY	Y. MINAMIHARA	DATE 10-21-03
CHK BY		DATE

LAWRENCE BERKELEY LABORATORY
UNIVERSITY OF CALIFORNIA-BERKELEY

KAMLAND
4-PI CALIBRATION SYSTEM
PIN BLOCK - SLIDE PLATE GUIDE

PAT CLEAR	DWG TYPE	SHOWN ON	SCALE: 2X
	DETAIL		DO NOT SCALE PRINTS
MICROFILMED	DESIGN ACCT NO	CATEGORY CODE KA0001	DWG NO 27A1142 REV