REQD	ITEM	PART NO.	DESCRIPTION
			304 STAINLESS STEEL

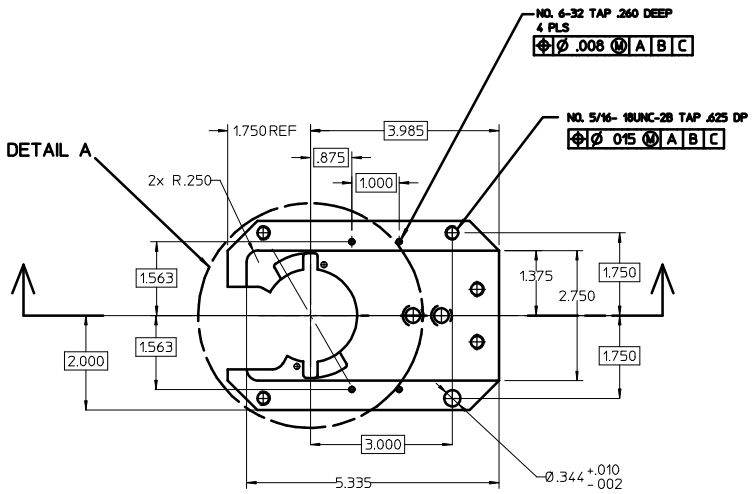

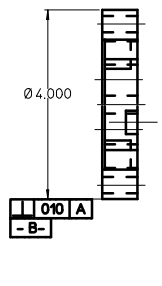

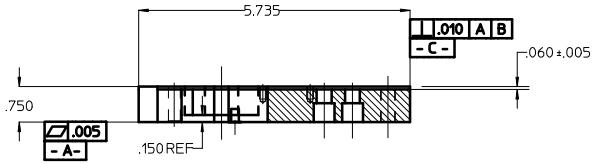

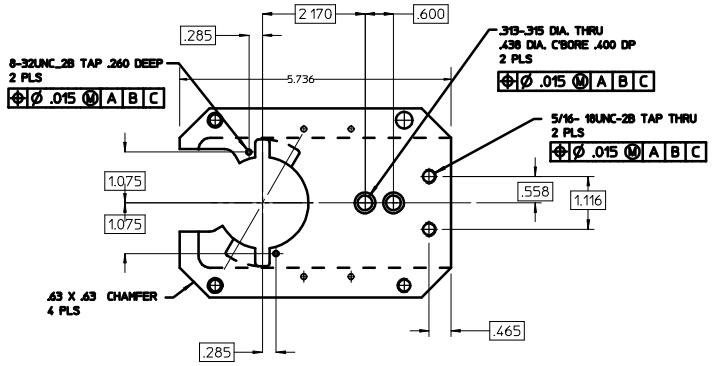

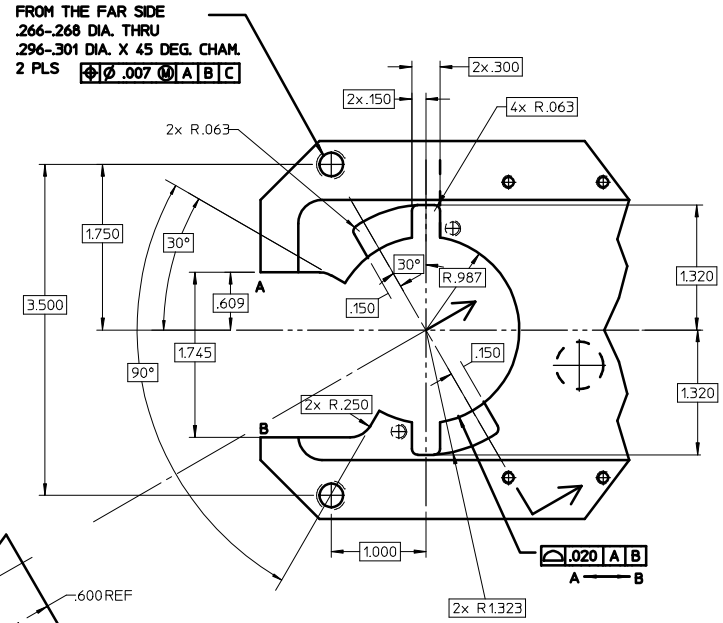

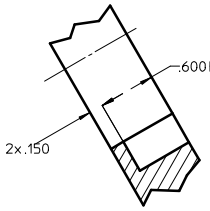

DETAIL A
SCALE: 2X

TWO DIFFERENT VIEWS OF THE SAME PART

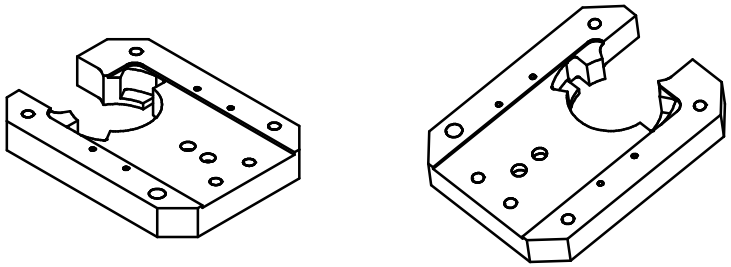

27A1106

NOTE: 1. ALL DIMENSIONS ARE IN INCHES.

REV	DWG	CHK	ZONE	DATE	CHANGES

UNLESS OTHERWISE SPECIFIED
TOLERANCES: .X ± .1 FRAC. ± 1/64; .XX ± .03 ANGLES ± 1°; .XXX ± .015 FINISH 63
THREADS ARE CLASS 2
CHAMFER ENDS OF ALL SCREW THREADS 30°.
CAP 1.5 PITCH RAD RELIEF BETW MAJOR DIAS. ON MACHINE CUT THREADS.
BREAK EDGES .010 MAX. ON MACHINED WORK.
REMOVE BURRS AND SPLATTER & LARGE SCALE
REFERENCES: ANSI Y14.5 & B46.1.

SHOP ORDERS
ACCT NO. / MATERIAL NO. / DATE / DATE REQD. / NO. REQD. / DELIVER TO / SUPPLIER TREATMENT: DEGREASE / FORM / WIDTH / LENGTH / TAG / DRAWN: Y. MIANMIHARA / DATE: 11-10-93 / CHK. / APV. / DATE

LAWRENCE BERKELEY LABORATORY
UNIVERSITY OF CALIFORNIA-BERKELEY
KAMLAND
4-PI CALIBRATION SYSTEM
PIN BLOCK - REMOVABLE MOUNTING BLOCK

PATENT CLEAR	DWG. TYPE	SHOWN ON	SCALE	DWG. NO. SCALE CHANGE
	DETAIL		FULL	
MICROFILMED	MASTER ASSY NO.	CATEGORY CODE	SIZE	REV.
		KA0001	27A1106	