REQ	ITEM	PART NUMBER	DESCRIPTION
A/R	1		304 STAINLESS STEEL
2	2	27A1083	PIN BLOCK - TUBE SEGMENT GUIDE
2	3		DOWEL PIN, 1/4 DIA. X 1/2" LONG, SST.

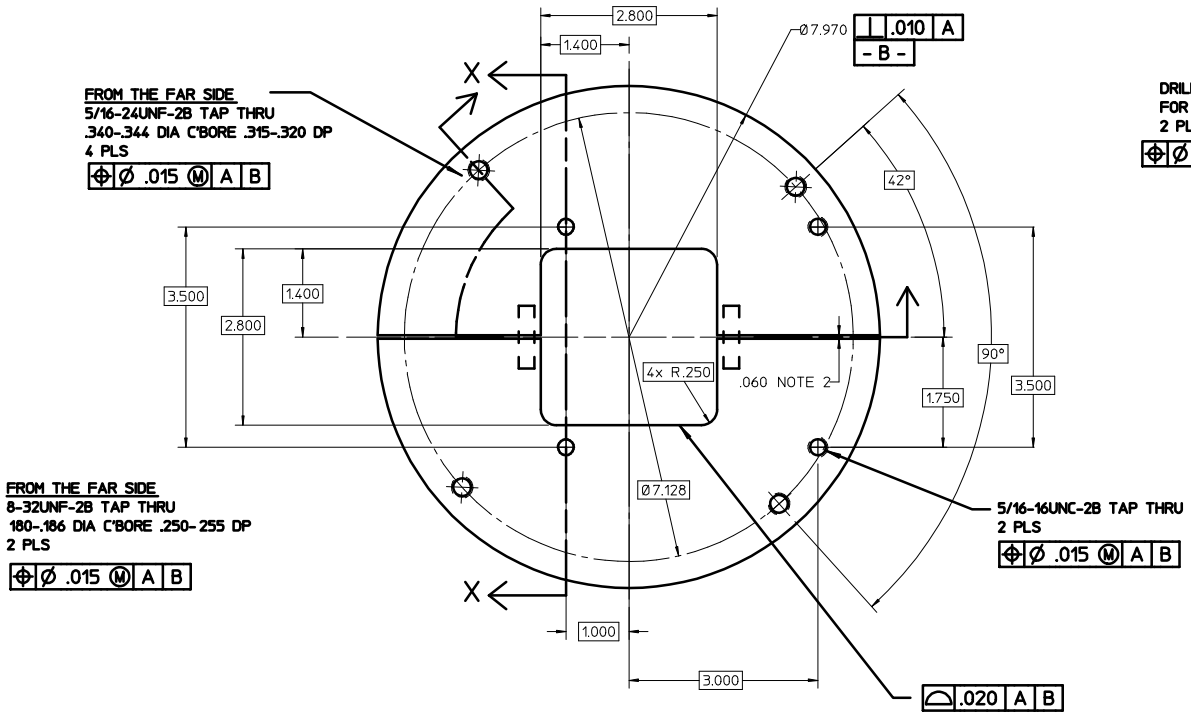

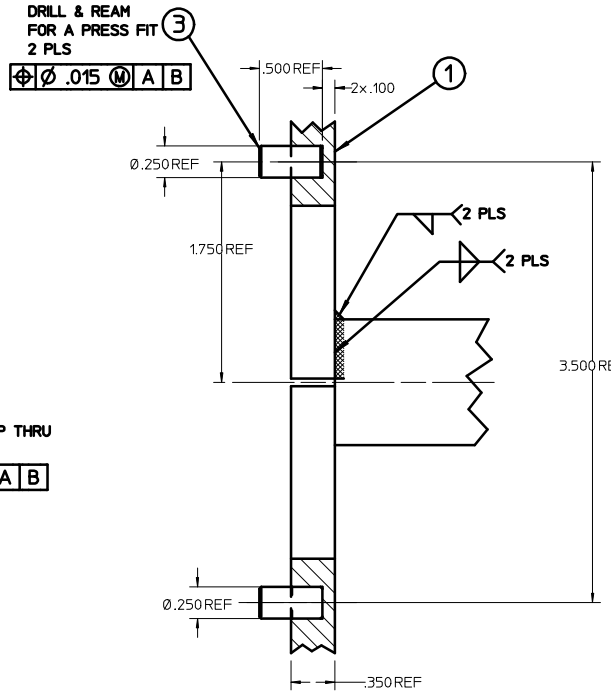

SECTION X - X
SCALE: 2X

27A1094

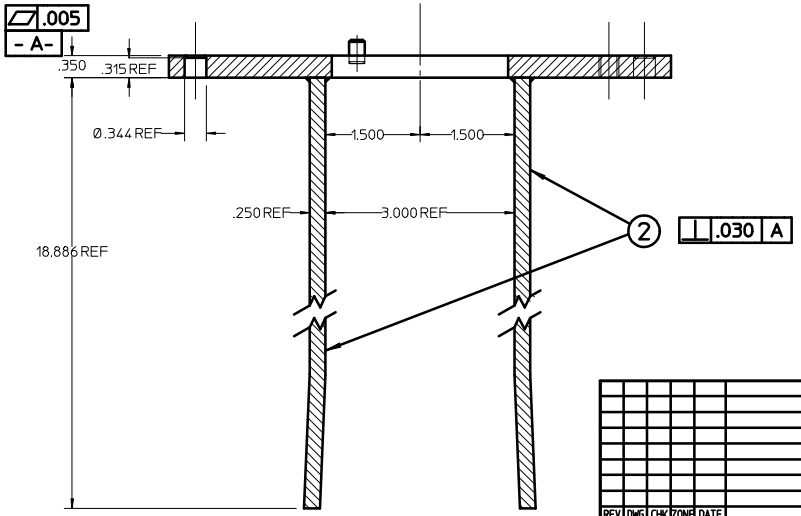

NOTE 1. ALL DIMENSIONS ARE IN INCHES.
2. MACHINE THE FINISHED PART INTO TWO HALVES. THE TWO HALVES MUST STILL MEET TOLERANCES AFTER MACHINING.

REV	DWG	CHK	ZONE	DATE	CHANGES

UNLESS OTHERWISE SPECIFIED
TOLERANCES: .X ± 1 FRAC. ± 1/64; .XX ± .03 ANGLES ± 1°; .XXX ± .015 FINISH 125
THREADS ARE CLASS 2
CHAMFER ENDS OF ALL SCREW THREADS 30°
CUT 1.5 PITCH THRU RELIEF WITH ROUND NOSE TOOL ON MACHINE CUT THREADS.
BREAK EDGES .016 MAX. ON MACHINED WORK
REMOVE BURRS WELD SPLATTER & LOOSE SCALE
REFERENCES: ANSI Y14.5 & B46.1.

SHOP ORDERS
ACCT. NO. | SERIAL NO.
DATE ISSD | DATE REQD. | IND. REQD.
DELIVER TO
SURFACE TREATMENT: DEGREASE
IDENT METH.: TAG
DWG BY: Y. MINAMIHARA DATE: 10-21-03
CHK. BY | DATE

LAWRENCE BERKELEY LABORATORY
UNIVERSITY OF CALIFORNIA-BERKELEY
KAMLAND
4-PI CALIBRATION SYSTEM
PIN BLOCK - SPLIT MOUNTING PLATE

PATENT CLEAR	DWG. TYPE	SHOWN ON	SCALE	DO NOT SCALE PRINTS
	DETAIL		FULL	

MICROFILMED	DESIGN ACCT NO	CATEGORY CODE	DWG. NO	SIZE	REV.
		KA0001	27A1094		