REQ	ITEM	PART NUMBER	DESCRIPTION
			PLATE, 304 S.S.

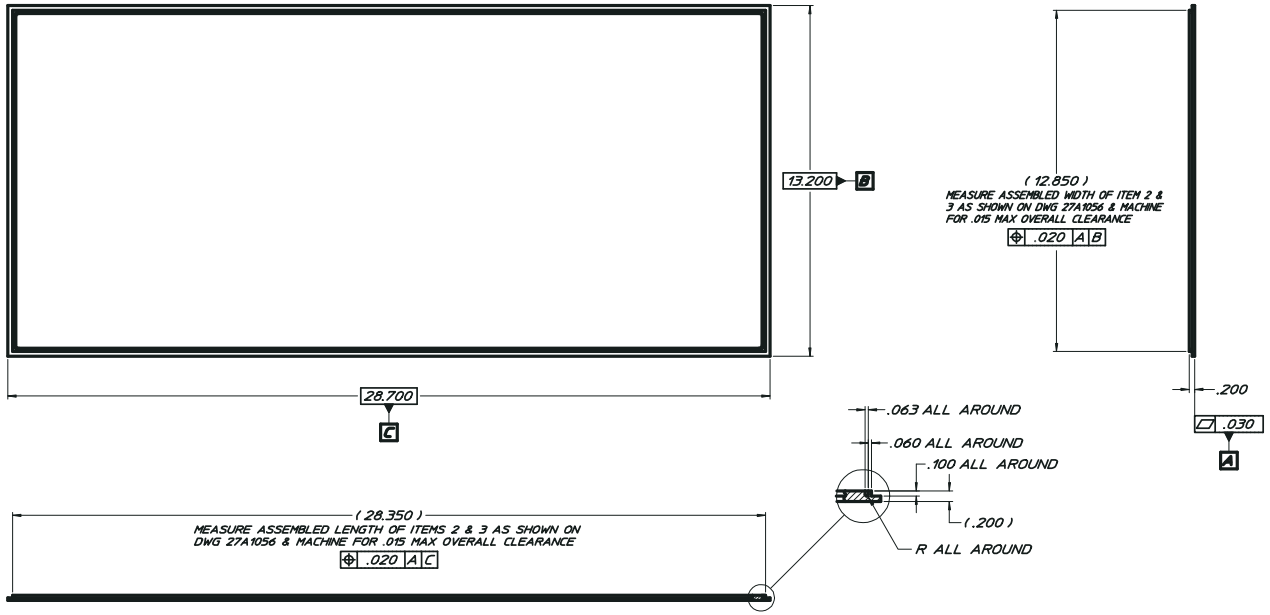

27A1044

NOTE:

1. ALL SURFACES ARE TO BE MACHINED OR GROUND. STOCK OR SAW-CUT SURFACES ARE NOT ACCEPTABLE
2. UNLESS OTHERWISE SPECIFIED, ALL INSIDE CORNER RADII ARE .010 MAX & CHAMFER ALL EDGES .020 X 45°.
3. DIMENSIONING & TOLERANCING IS PER ASME Y14.5M-1994. ALL DIMENSIONS ARE IN INCHES. REFERENCE DIMENSIONS ARE SHOWN IN PARENTHESIS.
4. ESTIMATED WT. = 21 LBS.

REV	DWG	CHK	ZONE	DATE	CHANGES

UNLESS OTHERWISE SPECIFIED
TOLERANCES: .X ± --- FRAC. ±1/64; .XX ± .03 ANGLES ± 2°; .XXX ± .015 FINISH 63
THREADS ARE CLASS 2
CHAMFER ENDS OF ALL SCREW THREADS 30° CUT 1.5 PITCH THRU RELIEF WITH ROUND NOSE TOOL ON MACHINE CUT THREADS
BREAK EDGES .016 MAX. ON MACHINED WORK
REMOVE BURRS WELD SPLATTER & LOOSE SCALE
REFERENCES: ANSI Y14.5 & B46 1.

SHOP ORDERS
ACCT. NO. | SERIAL NO.
DATE ISSD. | DATE REQD. | NO. REQD.
DELIVER TO
SURFACE TREATMENT DEGREASE
IDENT METH.
DWG. BY S.R. ABBOTT DATE 10-20-03
CHK BY K. HEEGER DATE 10-20-03

LAWRENCE BERKELEY LABORATORY
UNIVERSITY OF CALIFORNIA-BERKELEY
KAMLAND
4-PI CALIBRATION SYSTEM
GLOVEBOX EXTENSION TOP PLATE

PATENT CLEAR	DWG. TYPE	SHOWN ON	SCALE	DO NOT SCALE PRINTS
	DETAIL		1:2 & 1:1	
MICROFILMED	DESIGN ACT NO	CATEGORY CODE	DWG. NO.	SIZE / REV.
		KA0001	27A1044	