REQD	ITEM	PART NO.	DESCRIPTION
A/R	1		PLATE, 304 STAINLESS STEEL
A/R	2		PLATE, 304 STAINLESS STEEL
A/R	3		ANGLE, 3/4 X 3/4 X 3/16, 304 STAINLESS STEEL

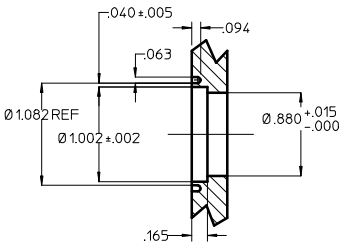

DETAIL A
SCALE: 2X

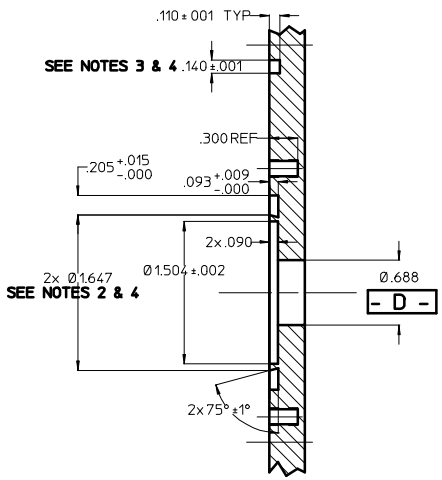

DETAIL B
SCALE: 2X

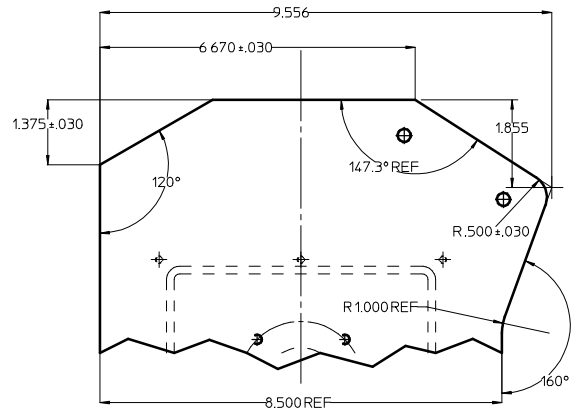

DETAIL C
SCALE: FULL

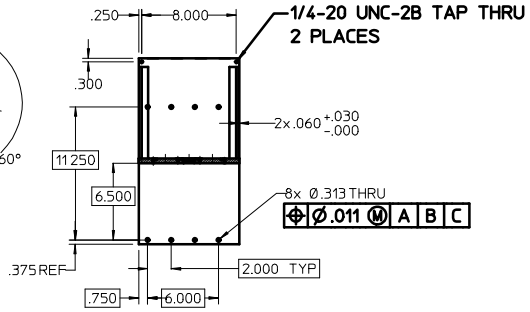

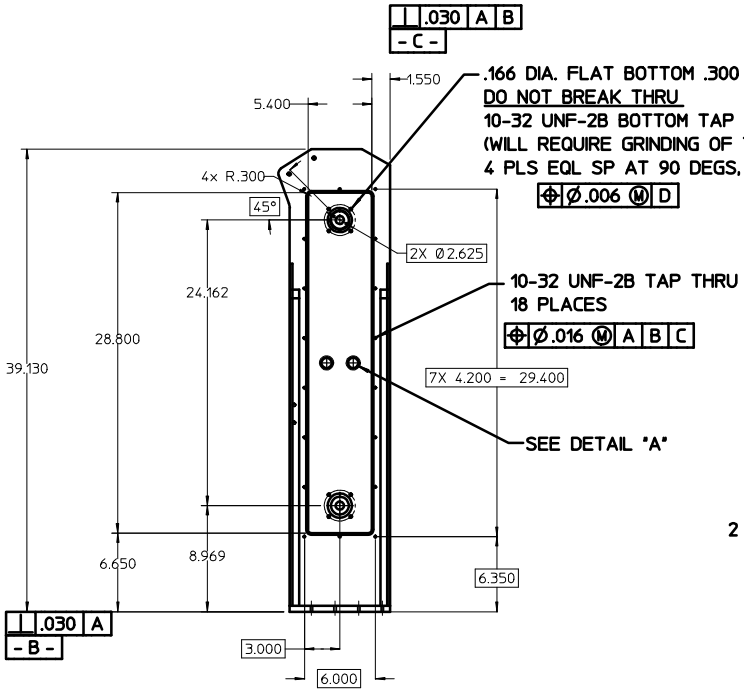

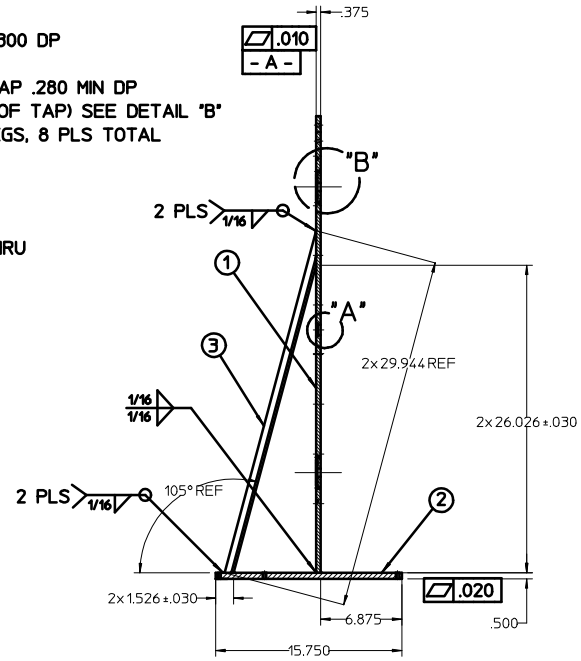

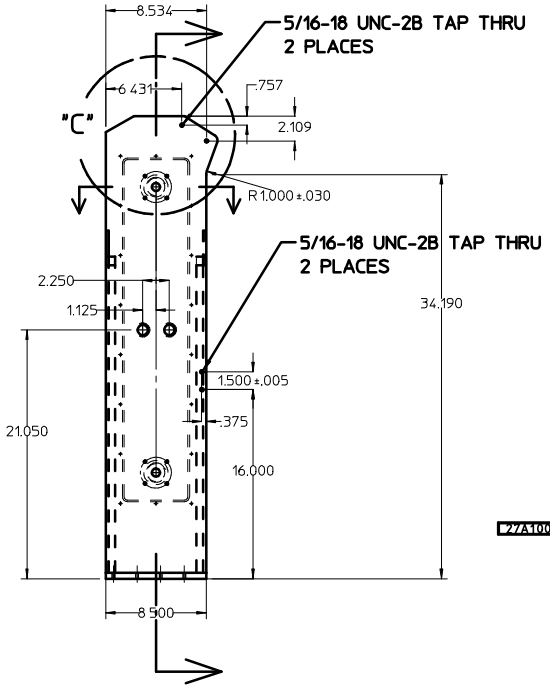

27A1006

NOTES: 1. ALL DIMENSIONS ARE IN INCHES.
2. GROOVE FOR PART #2-223. 1.609 I.D. X .139 CS O-RING.
3. GROOVE FOR PARKER 1/8" DIA. (NOM) O-RING.
4. ALL BOTTOM SURFACES OF O-RING GROOVES SHALL HAVE A 63 FINISH AND NOT HAVE ANY TRANSVERSE SCRATCHES OR TOOL MARKS.
5. ESTIMATED WEIGHT: 55 LBS

REV	DWG	CHK	ZONE	DATE	CHANGES

UNLESS OTHERWISE SPECIFIED: .X ± .1; .XX ± .03; .XXX ± .010; ANGLES ± 1°; FINISH 125 MAX; FRAC. ± 1/64; THREADS ARE CLASS 2; CHAMFER EDGES OF ALL SCREW THREADS 30°, OR 1.5 PITCH NON-ROLLED BEFORE HARDENING, ALL ON MACHINE CUT THREADS; BREAK CORNERS .016 MAX. ON MACHINED WORK; REMOVE BURRS AND SPLATTER & LARGE SCALE REFERENCES: ANSI Y14.5 & B46.1.

SHOP ORDERS: ACCT NO. / MATERIAL NO. / DATE / DATE REQD. / NO. REQD. / DELIVER TO / SURFACE TREATMENT: DEGREASE / FINISH / HEAT TREAT / DRW: MINAMIHARA / DATE: AUG. '03 / APV: STEVE ARBOTT / DATE: AUG. '03

LAWRENCE BERKELEY LABORATORY
UNIVERSITY OF CALIFORNIA-BERKELEY
KAMLAND
4 PI CALIBRATION SYSTEM
DRIVE MOUNTING PLATE

PATENT CLEAR | DWG. TYPE: DETAIL | SHOWN ON | SCALE: 1/4 | DWG. NO.: 27A1006 | SIZE | REV.
INTERCHFLI/REV | SYSTEM ASSY NO. | CATEGORY CODE